PARTS CATALOGUE

DATSUN SPORTS CAR

FairLady

MODEL SP310-U, SPL310

1963

NISSAN MOTOR CO., LTD.

TOKYO, JAPAN

FOREWORD

(1) This publication contains all the parts of **DATSUN FAIRLADY 1500, MODEL SP310 & SPL310**, and arranged in order of parts number as a rule beginning with parts of the engine section

(2) BRIEF SPECIFICATION OF EACH MODELS

MODEL	PART TYPE	ENGINE TYPE	SPECIFICATION
S P 310	104	G	For domestic (Right-hand drive car)
S P 310-U	104	G	For export (Right-hand drive car)
SPL 310	105	G	For export (Left-hand drive car)

(3) EXPLANATION OF TEXT

(A) The parts with "J" in the quantity column are used as optional parts.

(B) "As req." is the abbreviation of "as required" and ( ) in the same column are used as exclusive service parts.

(C) Parts printed in gothic type show the assemblies, sub-assemblies and components, of which are indented as follows.

ASS'Y-BRAKE, front (R.H) .....Assembly

ASS'Y-SHOE, front brake, fore.....Sub-assembly

LINING-brake.....Component

(D) The mark " ○ ", front of parts number, means newly established parts from this series.

When the parts number is altered or newly established, please make corrections or additional remarks in this parts catalog according to our periodical **Spare parts Journal**

NISSAN MOTOR CO., LTD.

MAJOR SPECIFICATIONS

ITEM \ MODEL		SP310	SPL310
CAR DIMENSIONS			
Overall length	(㎜)	3,910	3,953
Overall width	(㎜)	1,495	1,495
Overall height	(㎜)	1,275	1,275
Wheel base	(㎜)	2,280	2,280
Tread-front	(㎜)	1,213	1,213
Tread-rear	(㎜)	1,198	1,198
Road clearance	(㎜)	160	160
CAR WEIGHT			
Car weight	(Kg)	870	870
Seats		3	3
Total car weight	(Kg)	1,035	1,035
PERFORMANCES			
Maximum speed	(Km/h)	150	150
Fuel consumption	(Kg/l)	16.5	16.5
Grade ability	($\sin\theta$)	0.515	0.515
Minimum turing radius	(m)	4.9	4.9
ENGINE			
Type		G	G
Sort		Gasoline	Gasoline
Cylinder arrangement		4-in line	4-in line
Cycle		4	4
Valve arrangement		Over head	Over head
Bore × Stroke	(㎜)	80 × 74	80 × 74
Piston total displacement	(c.c)	1,488	1,488
Compression ratio		8.0:1	8.0:1
Maximum power	(PS/r.p.m)	71/5,000	(S.A.E) 75/5,000
Maximum torque	(Kg-m/r.p.m)	11.5/3,200	11.5/3,200
Length × Width × Height	(㎜)	640 × 603 × 637	640 × 603 × 637
Total engine weight	(Kg)	145	145

EXPLANATION OF NISSAN PART NUMBER

Construction of Part Number

Part No. consits of 10 figures in the following construction.

Section	Proper No.	Part Type	Distinction
○ ○	○ ○ ○	○ ○ ○	○ ○

1. Section (2 Figures)

Section is shown by 2 figures in the range 10 ~ 99 where all the parts are classified functionally into large groups. (Refer to the annexed table No. 1, "Table of Section & Proper No.")

2. Proper Number (3 Figures)

Proper No. is shown by 3 figures based upon the following basis.

(1) As a rule, parts are classified into Sections according to their function. (Refer to the annexed table No. 1, "Table of Section & Proper No.")

(2) When the part B is necessary for the part A, it is classified into the Section of A. For example, if Bracket is necessary for installing Rear spring, the Bracket is put into the Section of Rear Spring, not into the Section of Frame.

(3) Proper No. is assigned in the order, as a rule, from the part proper to the par to be assembled to it.

(4) Proper No. shown by 000 or 00 in the rear in assigned for the assemblies, not for single parts.

3. Part Type (3 Figures)

Part Type is shown by 3 figures and divided into 5 kinds: small type, medium type, special type (Patrol and Carrier), Forklift, and large type in the range as shown.

Vehicle Type	Part Type	Range
Small	0 0 1 ~ 2 9 9	2 9 9
Medium	3 0 0 ~ 3 9 9	1 0 0
Patrol & Carrier	4 0 0 ~ 4 6 9	7 0
Forklift	4 7 0 ~ 4 9 9	3 0
Large	5 0 0 ~ 9 9 9	5 0 0

4. Distinction (2 Figures)

Distinction is shown by 2 figures and assigned according to the kind of parts in the range as shown.

Division / Kind of Part	Part Type	
	Present	Former
Parallel, Changed, Service	0 0 ~ 1 9	6 0 ~ 6 9
Service exclusive	2 5 ~ 2 9	7 5 ~ 7 9
Material	4 0 ~ 4 5	8 0 ~ 8 5
Processing	3 0 ~ 3 9 5 0 ~ 5 9	9 0 ~ 9 4

Distinction No. 5 not included in the above ranges are assigned as special part Nos. to be used within this company or used for reserve. "Present" in Part Type Section includes Models, 580 of large type B130 of medium type and 113 of small type, and those following them. "Former" includes Models preceding above Models.

(1) Parallel Part

Parts prepared for the same purpose and used for discrimination of those for Standard from those for Deluxe for instance.

(2) Changed Part

Parts, the design of which is changed, and used for discrimination from the original parts.

(3) Service Part

Parts for service only and not to be used when vehicle ass'y.

(4) Part Exclusive for Service

Parts to be sold as Kit or Set exclusively for service.

(5) Material Part

Parts forged or roughly processed and used for discrimination from those completed.

(6) Processing Part

Parts to be used within this factory for vehicle ass'y when they become necessary for prepuration at Supply Section.

Annexed Table No. 1

TABLE OF SECTION & PROPER NUMBER

L - Large
M - Medium

(LARGE CLASSIFICATION - MEDIUM CLASSIFICATION)

Classification L	Classification M	Section
10		Engine complete section
	000	Engine complete
	100	Engine ass'y
11		Engine section No. 1
	000	Cylinder parts
	100	Oil pan parts
	200	Engine support, front
	300	Engine support, rear
	400	Engine stabilizer
12		Engine section No. 2
	000	Piston, pin & ring
	100	Connecting rod
	200	Crank shaft
	300	Fly wheel
13		Camshaft & valve section
	000	Camshaft & timing gear
	200	Valve parts
14		Manifold section
	000	Manifold parts
	300	Ejector ass'y
15		Lubrication section
	000	Oil pump
	100	Oil tube
	200	Oil filter
16		Fuel section No. 1
	000	Carburetor
	400	Gasoline strainer
	500	Air cleaner
	600	Fuel supply system
	700	Injection pump
	800	Injection pump
17		Fuel section No. 2
	000	Fuel pump
	200	Fuel tank
	400	Fuel tank mounting
	500	Fuel piping
18		Engine control section
	000	Accelerator pedal
	100	Accelerator link
	400	Engine control
19		Decomp & governor section
	000	Decomp parts
	100	Governor parts
	200	Governor parts
	300	Governor parts
20		Exhaust section
	000	Exhaust tube
	100	Muffler
	200	Tail tube
21		Cooling system
	000	Water pump
	200	Thermostat
	300	Oil cooler
	400	Radiator
	500	Hose & mounting parts
22		Electric section No. 1
	100	Distributor
	200	Distributor
	300	Vacuum control
	400	Plug-spark & cords
23		Electric section No. 2
	100	Generator
	200	Generator
	300	Starter motor
	400	Starter motor
	500	Regulator
24		Electric section No. 3
	000	Wiring
	100	Cable parts
	200	Cable parts
	400	Battery
	500	Battery
25		Electric section No. 4
	000	Meters
	100	Meter parts
	200	Switches
	300	Switch & parts
	400	Fuse & holder parts
26		Electric section No. 5
	000	Lamps No. 1 (Outside)
	100	Lamps No. 1 (Outside)
	200	Lamps No. 2 (Inside)
	300	Horn
27		Room heater & radio
	000	Room heater
	100	Control box
	300	Radio & clock
30		Clutch group
	000	Clutch with housing
	100	Clutch disc
	200	Clutch cover & pressure plate
	400	Bell housing
	500	Clutch with drawal
	600	Clutch control
32		Transmission group
	000	Transmission ass'y
	100	Case, extension covers
	200	3-shaft gear train
	600	Synchronizer parts
	700	Speed-drive parts
	800	Shift-control parts
	900	Fork & levers
33		Auxiliary gear box section
	100	Transfer parts
	200	Transfer parts
	300	Power take off gear

Classification L	Classification M	Section
34		Transmission control
	100	Control device
	400	Linkage
	500	Linkage parts
36		Auxiliary brake section
	100	Drum & consernings
	300	Hand brake lever
	400	Hand brake cable
	500	Linkage on axle
	600	Linkage parts
37		Propeller shaft group
	000	Propeller shaft mounting
	100	Joint & yokes
	200	Propeller thaft primary
	300	Secondary propeller sharft
	500	Center bearing & hanger
38		Final drive unit
	100	Drive pinion & gear
	200	Companion flange
	300	Gear carrier
	400	Differential gear
	500	Front drive parts
40		Front axle section
	000	Front axle
	200	Hub & drum
	300	Road wheel
	500	Front axle parts
41		Front brake section
	000	Front brake
	100	Wheel cylinder
43		Rear axle section
	000	Rear axle
	100	Rear axle parts
	200	Hub & drum
	300	Road wheel
44		Rear brake section
	000	Rear brake
	100	Wheel cylinder
46		Master cylinder, pedal & piping
	000	Piping & cylinder ass'y
	100	Master cylinder parts
	200	Brake piping
	300	Brake tube parts
	400	Pedal parts
	500	Dust seal & mounting parts
47		Power brake section
	100	Vacuum tank
	200	Hydraulic power cylinder
	300	
	400	Vacuum tube
	500	Reservoirs mount parts
48		Steering section
	000	Steering ass'y
	100	Roller shaft
	200	Steering cover
	300	Steering mounting parts
	400	Steering wheel
	500	Steering linkage
50		Frame section
	100	Frame section
	200	
51		Cross member section
	000	Cross member parts
	200	Hook parts
54		Front suspension section
	000	Front spring
	200	Spring mounting parts
	300	Cross member-suspension
	400	Ass'y suspension
55		Rear suspension section
	000	Rear spring
	200	Spring mounting parts
56		Shock absorber section
	100	Front shock absorber
	200	Rear shock absorber & stabilizer
57		Spare tire section
	200	Spare tire carrier
60		Body complete white body
	000	Body front & body main
	100	Cab complete
61		Body front group
	000	Front body ass'y
62		Radiator shell & bumper section
	100	Radiator shell
	200	
	300	Radiator grille
	400	
	500	Radiator core support
	600	Bumper apron
	650	Front bumper
	800	Radiator shell fitting
63		Fender section
	100	Front fender
	800	Fender fitting
64		Hood ledge section
	100	Hood ledge
	800	Hood ledge fitting
65		Hood section
	100	Hood
	200	
	300	
	400	Hood hinge
	500	
	600	Hood lock
	700	
	800	Hood fitting
66		Cowl section
	100	Front pillar
	300	Cowl top

Classification L	Classification M	Section
	400	Cowl side
	500	Ventilator
	800	Cowl fitting
	900	Cowl trimming
67		Dash section
	100	Dash
	200	
	300	Dash lower
	800	Dash fitting
	900	Dash trimming
68		Instrument section
	100	Instrument
	200	
	300	
	400	Cluster lid
	500	Cluster lid
	600	Glove pocket & lid
	800	Instrument fitting
	900	Instrument trimming
72		Windshield section
	100	W/S outer & inner
	600	Glass & weatherstrip
	800	W/S fitting
73		Roof section
	100	Roof panel
	200	Roof rail
	800	Roof fitting
	900	Roof trimming
74		Floor section No. 1
	100	Toe riser
	200	Toe board
	300	Front floor
	400	
	500	Rear floor
	600	Under sill
	700	Seat riser
	750	Tunnel
	800	Floor member
	900	Floor trimming

Classification L	Classification M	Section
76		Body side section No. 1
	100	Body side frame
	200	
	300	Body side panel
	400	Body side sill
	500	Center pillar
	600	Rear pillar
	700	Rear wheel house
	800	Body side fitting
	900	Body side trimming
78		Rear fender section
	100	Rear fender
79		Back panel section
	100	Back panel
	200	
	300	Rear corner
	400	Rear seat back panel
	700	Rear window
	800	Back panel fitting
	900	Back panel trimming
80		Front door section No. 1
	100	Front door inner, outer
	200	Ventilator, sash
	300	Door window
	400	Hinge & check link
	500	Lock, remote control & handle
	600	
	700	Window regulator & handle
	800	Front door fitting
	900	Front door trimming
85		Rear door section No. 1
	100	Rear door inner, outer
	200	Ventilator, sash
	300	Door window
	400	Hing & check link
	500	Lock, remote control & handle
	600	
	700	Window regulator & handle
	800	Rear door fitting

Classification L	Classification M	Section
	900	Rear door trimming
84		Trunk section
	100	Trunk floor
	200	Trunk side
	300	Trunk lid
	400	Trunk lid lock, handle & support
	500	
	600	
	800	Trunk fitting
	900	Trunk trimming
85		Rear bumper section
	100	Rear bumper apron
	200	Rear bumper bracket
	800	Rear bumper fitting
86		Front seat section No. 1
	100	Seat cushion frame
	200	Seat back frame
	300	Seat cushion & trim
	400	
	500	Seat adjusting
	600	Seat back & trim
	700	Center arm rest & trim
	800	Seat fitting
88		Rear seat section No. 1
	100	Seat cushion frame
	200	Seat back frame
	300	Seat cushion & trim
	500	Seat adjusting
	600	Seat back & trim
	700	Center arm rest & trim
	800	Seat fitting
93		Rear baby section No. 1
	100	Guard frame
	200	Header board
	300	Side board & side gate
	400	Rear gate
	500	Rear body floor
	600	

classification L	classification M	Section	Classification L	Classification M	Section	Classification L	Classification M	Section
	650	Wheel housing						
	700	Rear body sill						
	800	Rear body fitting						
	900	Rear body trimming						
95		Body mounting section						
	100	Body mounting						
96		E,T,C, section No, 1						
	100	Step & consernings						
	200	Licence plate bracket						
	300	Back mirror						
	400	Sun visor						
	500	Ash tray						
	600	Fire extinguish						
	700	Assist rail						
	800	Package tray						
	900	Body name & caution plate						
97		E,T,C, section No, 2						
	100	Reflector						
	200	Plate meter						
99		Car complete & tool section -						
	000	Car complete						
	100	Chassis complete						
	500	Tool & setting parts						

(Annexed Table No.2)

TABLE OF PART TYPE

Small Type Part				Medium Type Part	
Vehicle Type	Part Type	Vehicle Type	Part Type	Vehicle Type	Part Type
113	001	G223	073	B130	300
L113	002	LG223	074	B40	301
123	003	VG223	075	VB40	304
L123	005	VLG223	076	C40	305
114	008	U223	077	VC40	307
124	009	UL223	078	B131	308
210	013	311	080	B41	309
L210	014	P311	081	VB41	310
220	015	WP311-U	082	B42	313
L220	016	P311-U	083	C42	314
G220	026	WPL311-U	084	NB42	315
211	027	A120	085	VC42	316
221	028	SPL213	086	B132	317
G221	029	320	087	VB132	320
L211	030	L320	088	FPB42	321
L221	031	VA120	089	30	322
A20	032	U320	090	C43	323
115	033	V320	091	VC43	324
125	034	UL320-U	092	FRB42	325
LG220	035	VL320-U	093	D30	326
U221	036	312	094	V30	327
V221	037	P312	095	KC43	330
LG221	039	PL312	096	B140	331
P211	040	WP312	097	NB140	332
310	041	WPL312	098	C140	333
L310	042	A121	099	L30	335
U222	043	VA121	100	VC140	336
P310	044	N320	101	VNC140	337
WPL310	045	SP310	104	FRB140	338
VG222	046	SPL310	105	FB140	339
SPL212	047		106	GB140	341
VG221	049		107	G30	342
222	050		108	LB140	343
G222	051		109	KC140	344
LG222	052		110	LC140	346
L222	053		111	WP30	349
126	054		112	40	350
PG222	065		113	L40	351
PLG222	066		114	C141	352
WP310	071		115	P30-U	357
223	072		116	LC141	358

Large Type Part

Special Part

Vehicle Type	Part Type	Vehicle Type	Part Type	Vehicle Type	Part Type
580	500	F582	571	4W61	400
S580	502	E592	574	2W71	405
L580	503	ME592	575	4W71	406
F580	504	GU582	579	R4W72	416
U580	505	680	580	2W65	419
UL580	506	S680	581	4W65	421
M580	507	M680	582	F4W65	422
ML580	508	U680	583	L4W65	424
590	509	F680	584	4W66	433
G-590	510	L680	585	L4W66	438
L590	512	UL680	587	4W73	439
U590	514	U690	588	60	440
M590	517	UG690	589	F4W66	441
MG590	518	G680	591	L60	442
ML590	520	MLE592	592	H60	443
UL590	522	801	593	LH60	444
E590	524	ULG582	594	G60	445
581	526	UR690	595	LG60	446
U581	530	E690	596	D4W73	447
M581	532	ME690	597	FH60	448
591	535	LG680	599	F4W73	449
G591	537	FL680	600	K60	451
U591	539	MLG690	603	KL60	452
UG591	540	MLEG 690	605	WG60	453
M591	543		606	WLG60	454
MG591	545		607	VG60	455
701	547		608	VLG60	456
E591	548		609	D60	457
UR591	549		610	N60	458
NUR591	550		611	DN60	459
582	551		612	DL60	461
L582	552		613		462
U582	553		614		463
M582	554		615		464
592	555		616		465
G592	556		617		466
U592	557		618		467
S592	558		619		468
M592	559		620		469
UG592	560		621		470
MG592	561		622		471
702	566		623		472

NISSAN STANDARD PART (N.E.S.)

N.E.S. (Nissan Engineering Standard) Parts consist of 6 digits, arrangement of which is, as a rule, in the following order:

Kind + Shape & Material + Nominal Dimensions + Lenght

For N.E.S. Parts that have been processed surface finishing or cotter pin hole, symbols showing these processings are added to the rear end.

Arrangement of Part No. Digits

Part Name	Arrangement of Digits				
Hexagon bolt	1 —	○	◎	◎	△	△
Carriage bolt	1 —	○	◎	△	△	△
Stud	2 —	○	◎	◎	△	△
Machine screw	3 —	○	◎	◎	△	△
Tapping screw Wood screw	5 —	○	◎	◎	△	△
Rivet Tubular rivet Split rivet	6 —	○	◎	◎	△	△
Hexagon nut	9 —	1	1	○	◎	◎
Self-locking hexagon nut	9 —	1	2	○	◎	◎
Miscellaneous nut	9 —	1	3	○	◎	◎
Washer	9 —	1	5	○	◎	◎
Tooth lock washer	9 —	1	6	○	◎	◎
Nut retainer	9 —	1	7	○	◎	◎
Pin & Key	9 —	2	0	◎	△	△
Plug	9 —	3	1	○	◎	◎
Grease nipple	9 —	3	2	○	◎	◎
Electric parts	9 —	4	☆	○	◎	◎
Rubber parts	9 —	5	☆	○	◎	◎

NOTE : ☆ Kind, ○ Shape & Material, ◎ Nominal dimension, △ Length.

1. Distinction by Kind

Kind	Part Name	Kind	Part Name
1	Bolt	915, 916	Washer
2	Stud	917	Nut retainer
3	Machine screw	92	Pin & Key
5	Tapping screw & wood screw	931	Plug
		932	Grease nipple
6	Rivet	941~949	Electric parts
911~913	Nut	951~959	Rubber parts

2. Distinction by Shape & Material

It shows Shape & Material and is added next to the digits showing Kind, with a digit.

Digits for Shape & Material

Part Name	Shape & Material	Digit
Hexagon Bolt	Low carbon steel	1
	Medium carbon steel	2
	Alloy steel	3
Carriage Bolt	Round head	7
	Flat head	8
	Step	9
Stud	Low carbon steel (for cast iron)	1
	Medium carbon steel (for cast iron)	2
	Low carbon steel (for light alloy)	3
	Medium carbon steel (for light alloy)	4
Machine Screw	Pan head	1
	Flat head	2
	Oval head	3
	Truss head	4
	Bind head	5
	Hexagon head	6
Tapping Screw	Pan head	1
	Flat head	2
	Oval head	3
	Truss head	4
Wood Screw	Round head	7
	Flat countersunk head	8
	Oval head	9
Rivet	Round head	1
	Flat countersunk head	2
	Flat head	3
Tubular Rivet	Oval head	6
	Flat countersunk head	7
Split Rivet	Oval head	8
Hexagon Nut	Hex. low carbon steel	1
	Hex. medium carbon steel	2
	Low	3
	High-low carbon steel	4
	High-medium carbon steel	5
	Recess-high-low carbon steel	6
	Recess-high-medium carbon steel	7
		8
	Recess-low-low carbon steel	9
	Recess-low-medium carbon steel	0

Part Name	Shape & Material	Digit
Hex. Nut with Stopper	N, low carbon steel	3
	N, medium carbon steel	4
	N, low-low carbon steel	5
	N, low-medium carbon steel	6
Other Nut	Square	1
	Wing (forged)	4
	Wing (sheet)	5
Washer	Spring lock, medium	1
	Spring lock, thick	2
	Plain, standard	4
	Plain, large	5
	Finish	8
Shakeproof Washer	Inside ratchet (outside dia. small)	1
	Inside ratchet (outside dia. large)	2
	Outside ratchet	3
	80° countersunk	4
	90° countersunk	5
	Both sides ratchet	6
Nut Retainer	Both shanks round hole	1
	One shank round hole	2
	Both shanks long hole	3
	One shank long hole	4
Pin & Key	Cotter pin	1
	Semicircular key	6
	parallel key	8
Threaded Plug	Square head taper thread	1
	Square hole taper thread	2
	Recessed taper thread	2
	Hex. head taper thread	3
	Hex. head parallel thread	4
Grease Nipple	Straight	1
	67-5°	2
	90°	3
Rubber	Rubber grommet	1

3. Distinction by Alias Dimension

Distinction by alias dimensions of diameter and width, and apply 2 digits next to the rear of the digit showing Shape & Material.

Digits for Alias Dimensions

		#1	#2	#3	#4	#5	#6	#8		#10	#12		#14		#16								
Alias Dimensions	inch	1/16"		3/32"	1/8"	5/32"	3/16"	1/4"		5/16"	3/8"		7/16"	1/2"	9/16"	5/8"	11/16"	3/4"	13/16"	7/8"	1"	1 1/8"
	1/16	1	2	3	4	5	6	8	9	10	12	13	14	15	16		18		20					
Digits	A	01	02	03	04	05	06	08	09	10	12	13	14	15	16	17	18	19	20	22	24	26	28	
	B	31	32	33	34	35	36	38	39	40	42	43	44	45	46	47	48	49	50	52	54	56	58	
	C	61	62	63	64	65	66	68	69	70	72	73	74	75	76	77	78	79	80					
	D	81	82	83	84	85	86	88	89	90	92	93	94	95	96	97	98	99	00					

4. Distinction by Length

Apply 2 digits next to the rear of those standing for Alias Dimension. However this is saved when the length is not necessary.

Digits for Length (inch)

Length (inch)	1/4"	3/8"	1/2"	5/8"	3/4"	7/8"	1"	1 1/16"	1 1/4"	1 3/8"	1 1/2"	1 5/8"	1 3/4"	1 7/8"	2"	2 1/8"	2 1/4"	2 1/2"	2 3/4"	3"
Digits	07	10	13	16	19	22	26	28	32	35	38	41	44	48	51	54	57	64	70	76

5. Symbols of Surface Processed, Cotter Pin Hole

For the parts that have been processed surface finishing or have cotter pin hole, apply the following digits adding- mark to the rear of the above mentioned parts number.

Digits for Surface Processed, Cotter Pin Hole, Brass, Copper

Surface process / Cotter pin hole	Surface not process	Zinc, Cadmium coat	Chrome coat	Copper coat	Phosphoric acid coat	Brass	Copper
None		1	2	3	4	5	6
Yes	10	11	21	31	41	51	61

SECTION INDEX

Item	Page	Fig. No.
CHASSIS	1～126	
ENGINE	1	-
CYLINDER	2～ 4	1,1-A
CYLINDER FITTING	4～ 5	1,1-A
OIL PAN	5	1
ENGINE FRONT MOUNTING	6～ 7	2
ENGINE REAR MOUNTING	7	2
PISTON	8～ 9	3
CONNECTING ROD	9	3
CRANK SHAFT	10	3
FLY WHEEL	10	3
CAMSHAFT & CHAIN TENSIONER	11～12	4
VALVE MECHANISM	12～13	4
CYLINDER HEAD & ROCKER COVER	14～15	5
MANIFOLD	16～17	6
OIL PUMP	18～19	7
OIL FILTER	20～21	8
CARBURETOR	22～25	9
AIR CLEANER	26～27	10
FUEL PUMP	28～30	11
FUEL TANK	31～32	12
FUEL PIPING	32	12
ACCELERATOR	33～34	13
CHOKE CONTROL	34	-
MUFFLER MOUNTING	35～37	14
WATER PUMP & FAN	38～39	15
RADIATOR	40～41	16

Item	Page	Fig. No.
DISTRIBUTOR	42~44	17
GENERATOR	45~46	18
STARTER MOTOR	47~49	20
DISTRIBUTOR & GENERATOR MOUNTING	50~51	21
IGNITION COIL & HIGH TENSION CABLE	51~52	21
WIRING	53~54	22
BATTERY	54	22
ELECTRIC UNIT	54~55	22
METER	56~57	23
W/S WIPER	58~59	24
HEAD LAMP	60~61	25
LAMP	62~67	26.27.28
CAR HEATER	68	-
RADIO	68	-
CLOCK	68	-
CLUTCH	69~70	29
TRANSMISSION	71~77	30.30-A.30-B
HAND BRAKE CONTROL	78~79	31
HAND BRAKE LINKAGE	80~82	32
PROPELLER SHAFT	83~84	33
SWIVEL AXLE	85~86	34
FRONT SUSPENSION (1)	86~87	34
FRONT BRAKE	88~89	35
FRONT HUB & DRUM	90~91	36
ROAD WHEEL	91	36
DIFFERENTIAL ASS'Y	92~95	37.37-A
REAR AXLE CASE & SHAFT	95~96	37.37-A
REAR HUB & DRUM	96	37
REAR BRAKE	97~98	38
BRAKE MASTER CYLINDER	99~100	39

Item	Page	Fig. No.
BRAKE PIPING	101~102	40
CLUTCH MASTER CYLINDER	103~104	41
CLUTCH OPERATING CYLINDER	105~106	42
BRAKE & CLUTCH PEDAL	107~108	43
STEERING GEAR	109~113	44.44-A
STEERING LINKAGE	114~116	45.45-A
STEERING WHEEL & HORN PUSH	117~118	46
FRAME	119~120	47
FRONT SUSPENSION (2)	121~123	48.48-A
REAR SUSPENSION	124~126	49
BODY	127~159	
FRONT APRON & BUMPER	127	50
RADIATOR GRILLE	127	50
FRONT FENDER	128~129	50
RADIATOR CORE SUPPORT	130~131	51
HOOD LEDGE	131	51
HOOD	131~132	51
COWL TOP FITTING	133~134	52
DASH TRIMMING	134	52
INSTRUMENT	135~136	53
WINDSHIELD	136~137	53
WINDSHIELD GLASS & WEATHERSTRIP	137	53
FLOOR FITTING	138~139	54
BODY SIDE FITTING	140~141	55
DOOR PANEL	142~144	56
DOOR VENTILATOR & SASH	144	56
DOOR WINDOW	144~145	56
DOOR TRIM	145	56
DOOR HINGE & CHECK LINK	145	56
DOOR LOCK, STRIKER & REGULATOR	146	

Item	Page	Fig. No.
DOOR HANDLE	147	56
PRIVATE LOCK & KEY	147	56
REAR FENDER & BACK PANEL	148~149	57
REAR BUMPER	149	57
TRUNK LID	150~151	58
TRUNK FITTING	151~152	58
FRONT SEAT & FITTING	153~154	59
REAR SEAT	154	-
REAR SEAT BACK FITTING	155~157	60
SOFT TOP & FRAME	158	60-A
TONNEAU COVER	159	-
BODY MOUNTING	159	-
INDEX (CLASSFIED BY PARTS No.)	161	

CHASSIS

DATSUN SPORTS CAR

PARTS CATALOGUE

MODEL SP 310 · SPL 310

CHASSIS

ILL. NO.	PART NO.	PART NAME	Q'TY PER SECTION SP310	Q'TY PER SECTION SPL310
		ENGINE		
○	10000-10450	ASS'Y-ENGINE, with transmission	1	-
○	10000-10550	ASS'Y-ENGINE, with transmission	U-1	1
○	10001-10450	ASS'Y-ENGINE, with clutch	1	-
○	10001-10550	ASS'Y-ENGINE, with clutch	U-1	1

CYLINDER BLOCK

Fig. 1

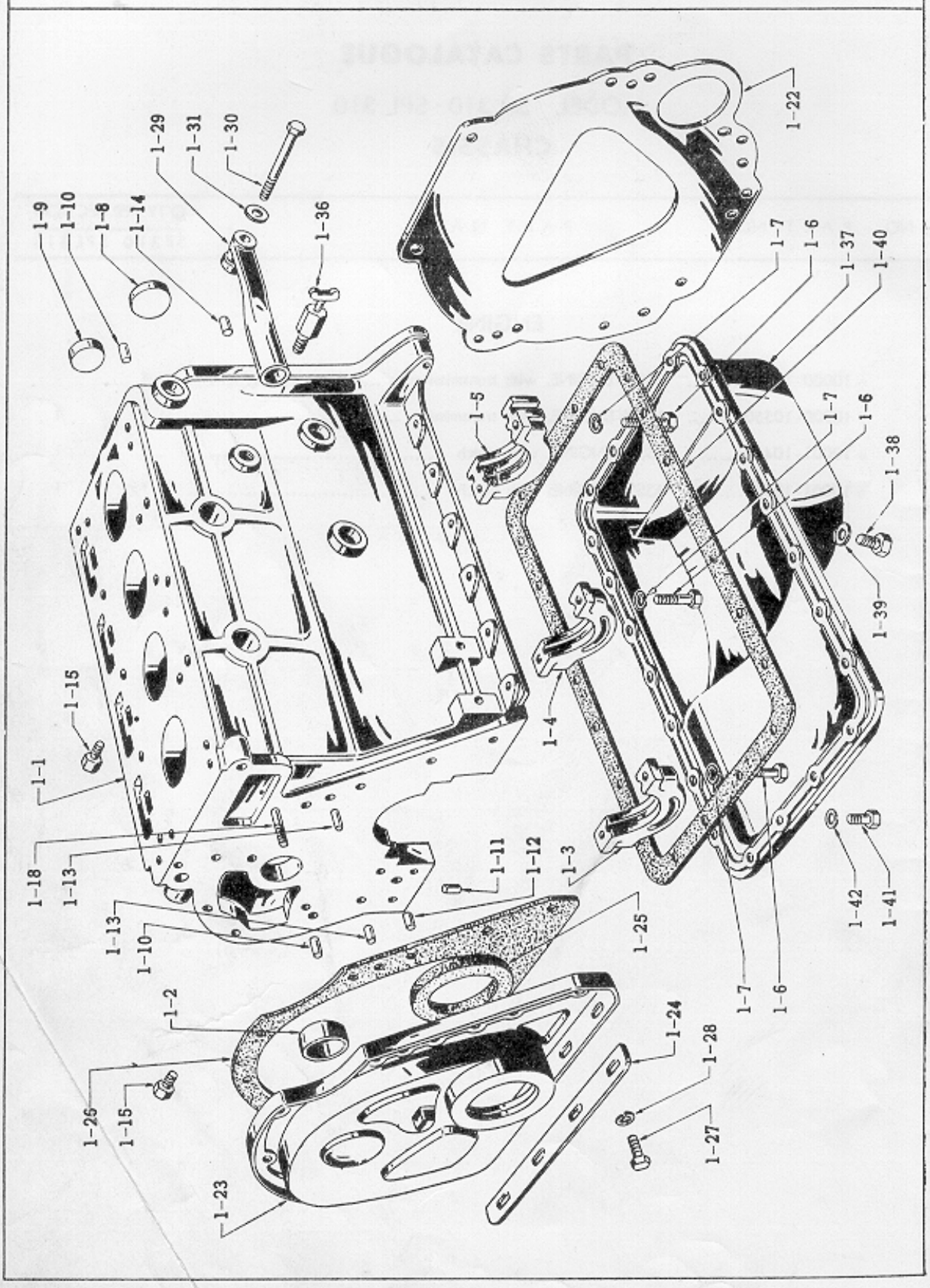

CYLINDER BLOCK

Fig. 1-A

O.H. GSKS. 10101-12227

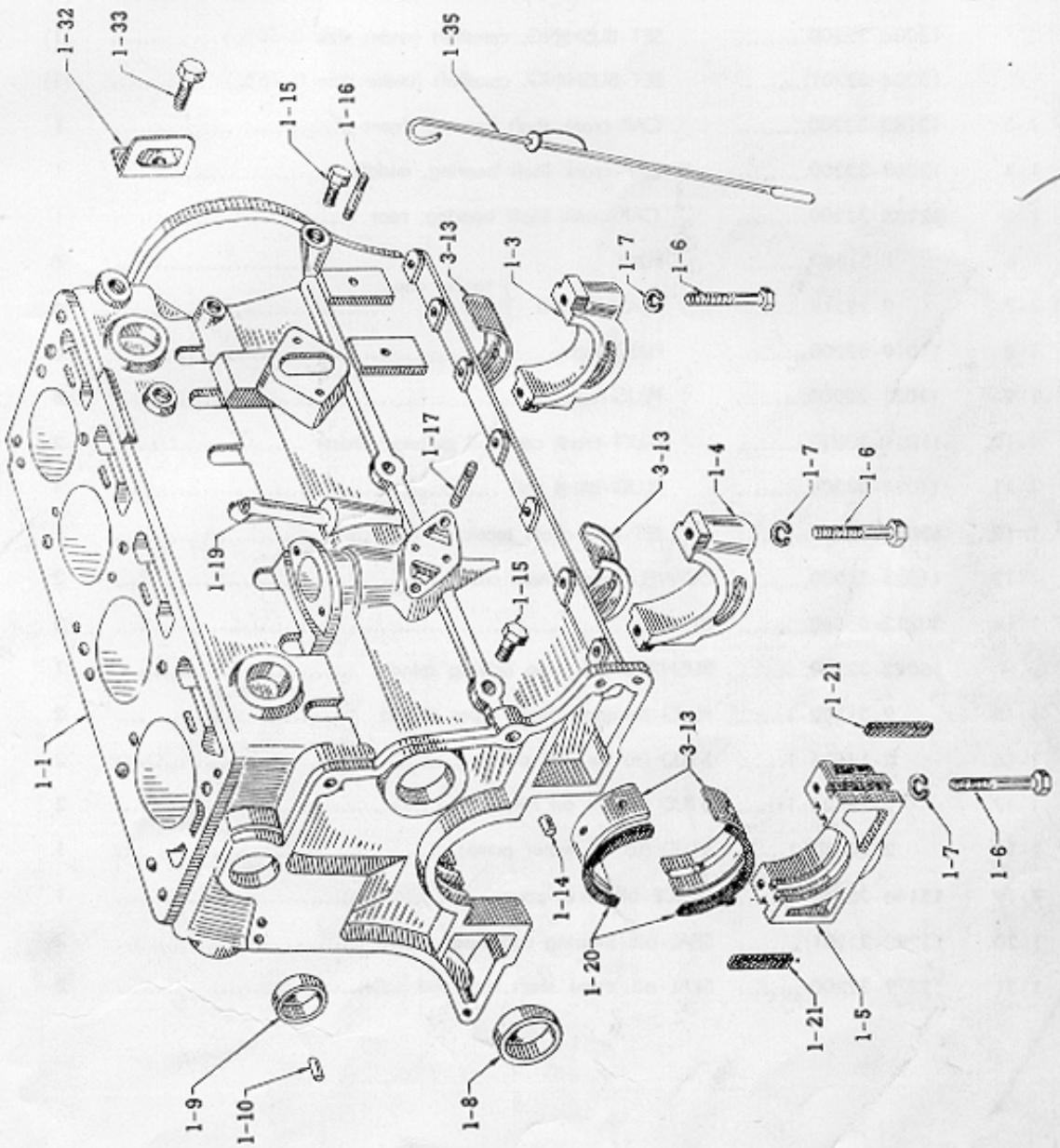

ILL. NO.	PART NO.	PART NAME	Q'TY PER SECTION SP310	Q'TY PER SECTION SPL310
		CYLINDER		
1-1	11010-32225	**ASS'Y-BLOCK, cylinder with plug**	1	1
1-2	13002-32200	SET-BUSHING, camshaft	1	1
	13003-32200	SET-BUSHING, camshaft (under size 0.25㎜)	(1)	(1)
	13004-32200	SET-BUSHING, camshaft (under size 0.50㎜)	(1)	(1)
	13004-32201	SET-BUSHING, camshaft (under size 0.75㎜)	(1)	(1)
1-3	12282-32200	CAP-crank shaft bearing, front	1	1
1-4	12283-32200	CAP-crank shaft bearing, middle	1	1
1-5	12286-32200	CAP-crank shaft bearing, rear	1	1
1-6	1-31880	BOLT } to fix cap	6	6
1-7	9-15218	WASHER-lock } to fix cap	6	6
1-8	11019-32200	PLUG-taper	1	1
1-9	11021-32200	PLUG-taper	5	5
1-10	11021-30000	PLUG-crank case oil gallery (brass)	2	2
1-11	11024-03200	PLUG-blind (Al)	1	1
1-12	13081-32201	JET-oil, chain tensioner (Al)	1	1
1-13	11023-32200	DOWEL-timing chain case	2	2
1-14	30412-85060	DOWEL	2	2
	15042-32200	BUSHING-oil pump driving spindle	1	1
1-15	9-31302-1	PLUG-hexagon, head taper thread	2	2
1-16	2-14525-1	STUD (to fix fuel pump)	2	2
1-17	2-14622-1	STUD (to fix oil filter)	2	2
1-18	2-14650-1	STUD (to fix water pump)	1	1
1-19	15146-25660	GUIDE-oil level gauge	1	1
1-20	12289-32201	SEAL-oil, bearing cap side	2	2
1-21	12279-32200	SEAL-oil, crank shaft rear end	2	2

ILL. NO.	PART NO.	PART NAME	Q'TY PER SECTION SP310	Q'TY PER SECTION SPL310

CYLINDER FITTING

1-22	30411-32200.....	PLATE-engine, rear	1	1
1-23	13035-32200.....	ASS'Y-COVER, timing chain	1	1
1-24	13037-32200..	PLATE-tapping, timing chain cover	1	1
1-25	13042-32200..	SEAL-oil, timing chain cover	1	1
1-26	13044-32200.....	GASKET-timing chain cover	1	1
1-27	1-11410-1.....	BOLT } to fix timing chain cover	9	9
1-28	9-15114-1.....	WASHER-lock } to fix timing chain cover	9	9
1-29	11030-32200.....	ELBOW-breather tube	1	1
1-30	1-11575-1.....	BOLT	1	1
1-31	11035-30000.....	WASHER-fiber	1	1
1-32	10005-32200.....	SLINGER-engine, front	1	1
1-33	1-11614.....	BOLT	1	1
	○ 15262-10400.....	ASS'Y-TUBE, breather	1	1
1-35	15140-32200.....	ASS'Y-GAUGE, oil level	1	1
1-36	21211-00800.....	COCK-drain	1	1
	11012-32200.....	LINER-cylinder (over size 4.00)	(4)	(4)
	11013-32200.....	LINER-cylinder (over size 4.50)	(4)	(4)
	11014-32200.....	LINER-cylinder (over size 5.00)	(4)	(4)

OIL PAN

1-37	11110-32200.....	ASS'Y-PAN, oil	1	1
1-38	11120-30000.....	PLUG-drain, oil	1	1
1-39	11026-30000.....	WASHER-drain plug	1	1
1-40	11121-32200.....	GASKET-oil pan to cylinder block	1	1
1-41	1-11412-1.....	BOLT	4	4
	1-11416-1.....	BOLT	16	16
	1-11422-1.....	BOLT	2	2
1-42	9-15114-4.....	WASHER-lock	22	22

ENGINE MOUNTING

Fig. 2

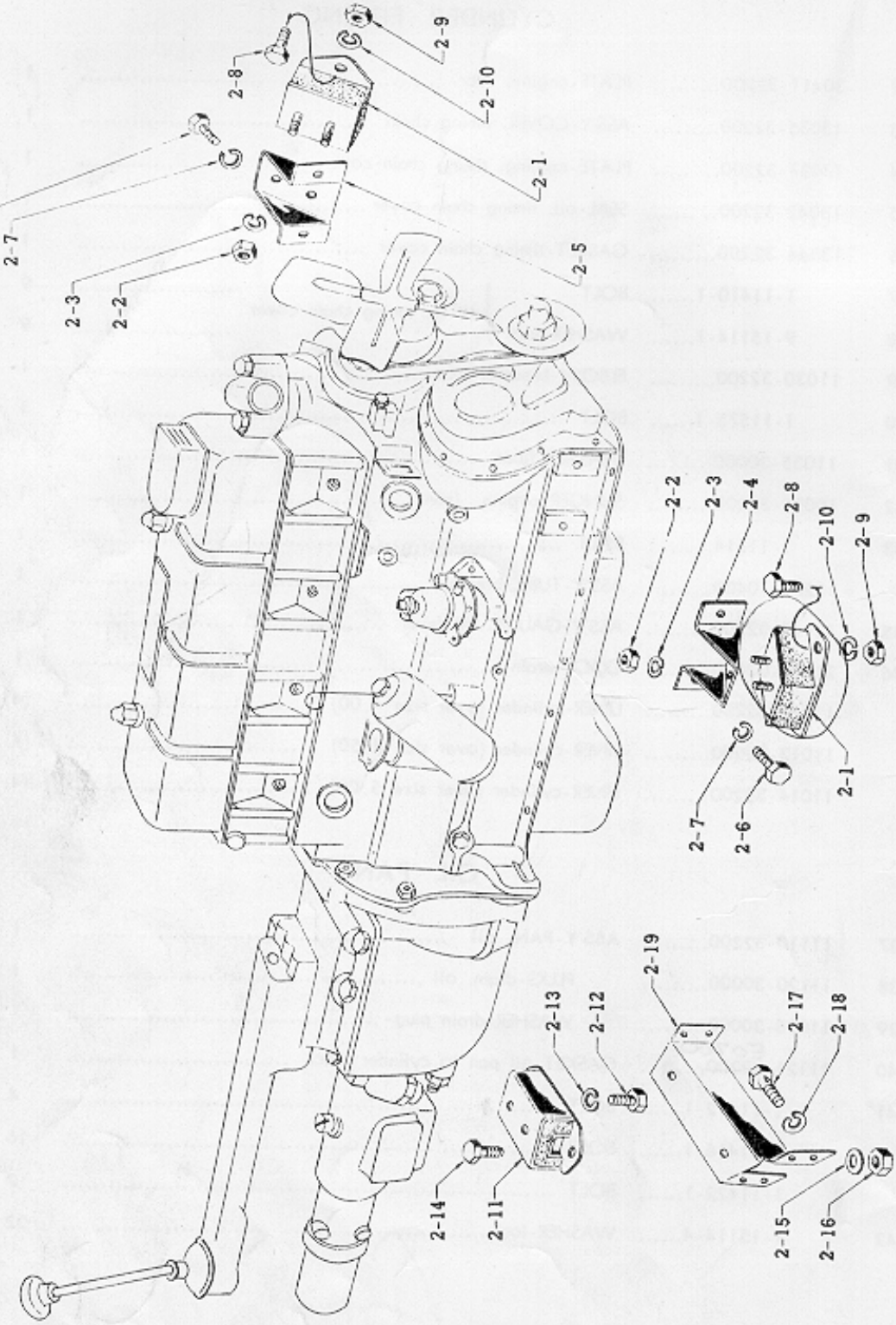

ILL. NO.	PART NO.	PART NAME	Q'TY PER SECTION SP310	Q'TY PER SECTION SPL310
ENGINE FRONT MOUNTING				
2-1	11223-32200.....	MOUNTING-engine, front	2	2
2-2	9-11145.....	NUT } mounting to bracket	4	4
2-3	9-15115.....	WASHER-lock } mounting to bracket	4	4
2-4	11215-32200.....	BRACKET-support, engine front (R.H.)	1	1
2-5	11216-32200.....	BRACKET-support, engine front (L.H.)	1	1
2-6	1-14628.....	BOLT } to fix bracket	4	4
2-7	9-15116.....	WASHER-lock } to fix bracket	4	4
2-8	1-14520.....	BOLT }	4	4
2-9	9-11145.....	NUT } to fix mounting	2	2
2-10	9-15115.....	WASHER-lock }	4	4
ENGINE REAR MOUNTING				
2-11	11328-08000.....	COMPLETE-MOUNTING, engine rear	1	1
2-12	1-14520.....	BOLT } mounting to transmission	2	2
2-13	9-15115.....	WASHER-lock } mounting to transmission	2	2
2-14	1-14622-1.....	BOLT }	2	2
2-15	9-15416-1.....	WASHER-plain } mounting to bracket	2	2
2-16	9-12346-1.....	NUT }	2	2
2-17	1-14520.....	BOLT } bracket to cross member	8	8
2-18	9-15215.....	WASHER-lock } bracket to cross member	8	8
2-19	11312-10401.....	SUPPORT-engine, rear	1	1

PISTON & CRANK SHAFT

Fig. 3

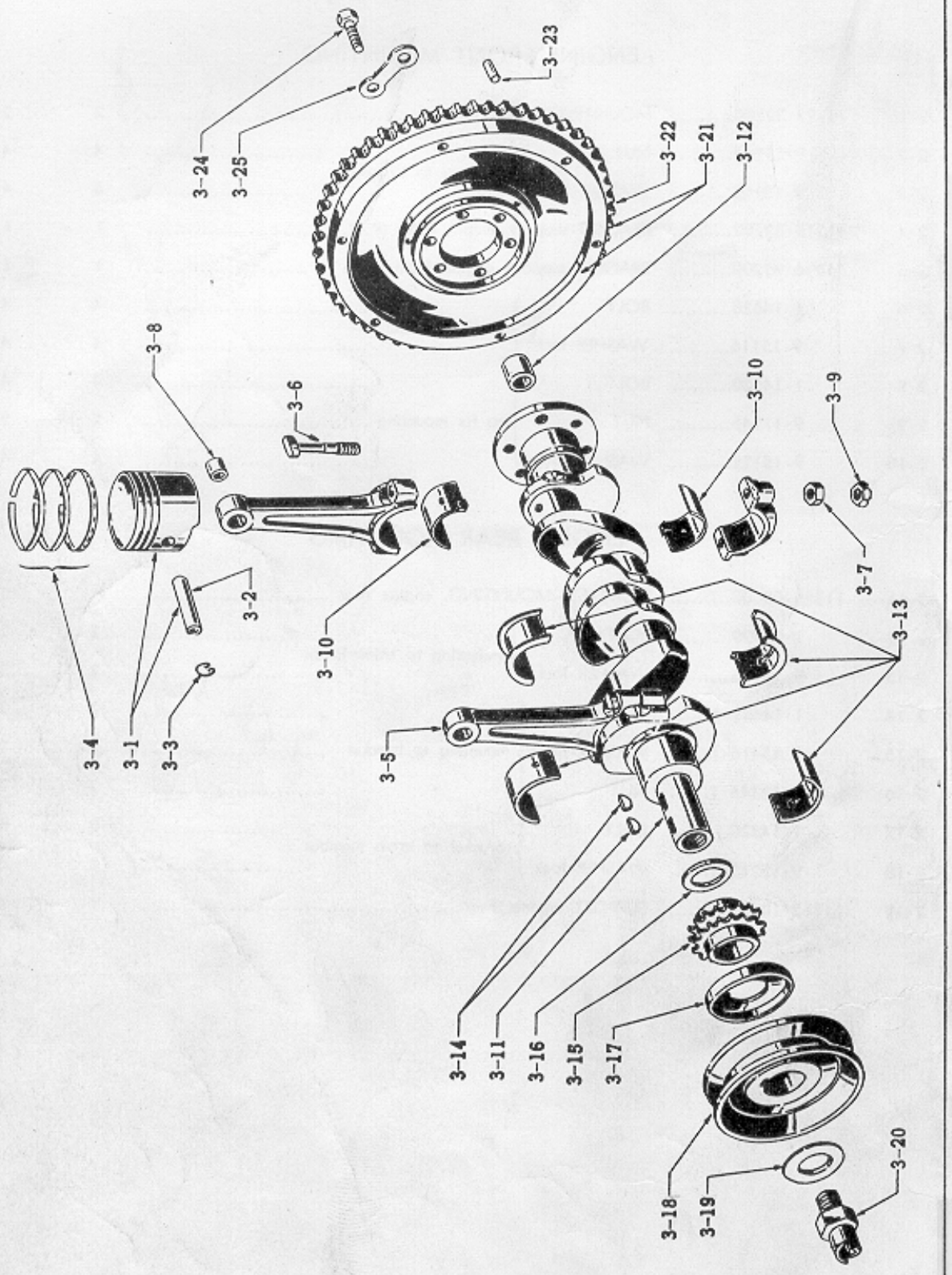

ILL. NO.	PART NO.	PART NAME	Q'TY PER SECTION SP310	Q'TY PER SECTION SPL310
		PISTON		
3-1	12010-32200.....	**SET-PISTON, WITH PISTON PIN (standard size)**	4	4
	12010-32202.....	**SET-PISTON, WITH PISTON PIN (0.25 mm over size)**	(4)	(4)
	12010-32203.....	**SET-PISTON, WITH PISTON PIN (0.50 mm over size)**	(4)	(4)
	12010-32204.....	**SET-PISTON, WITH PISTON PIN (0.75 mm over size)**	(4)	(4)
	12010-32205.....	**SET-PISTON, WITH PISTON PIN (1.00 mm over size)**	(4)	(4)
	12010-32207.....	**SET-PISTON, WITH PISTON PIN (1.50 mm over size)**	(4)	(4)
3-2	12024-32200.....	PIN-piston	4	4
3-3	12032-32200.....	RING-snap, piston pin	8	8
3-4	12033-32200.....	SET-RING, piston (standard size)	1	1
	12035-32200.....	SET-RING, piston (0.25 mm over size)	(1)	(1)
	12036-32200.....	SET-RING, piston (0.50 mm over size)	(1)	(1)
	12037-32200.....	SET-RING, piston (0.75 mm over size)	(1)	(1)
	12038-32200.....	SET-RING, piston (1.00 mm over size)	(1)	(1)
	12040-32200.....	SET-RING, piston (1.50 mm over size)	(1)	(1)
		CONNECTING ROD		
3-5	12100-32200.....	**ASS'Y-ROD, connecting**	4	4
3-6	12109-32200.....	BOLT-connecting rod	8	8
3-7	9-11246.....	NUT	8	8
3-8	12030-32200.....	BUSHING-connecting rod small end	4	4
3-9	12112-58000.....	NUT-pal	8	8
3-10	12111-~~10400~~ 12210	BUSHING-connecting rod, (standard size)	8	8
	12121-10400.....	BUSHING-connecting rod, (0.06 mm under size)	(8)	(8)
	12122-10400.....	BUSHING-connecting rod, (0.12 mm under size)	(8)	(8)
	12117-~~10400~~ 12210	BUSHING-connecting rod, (0.25 mm under size) ..... 00 UNDER	(8)	(8)
	12118-~~10400~~ 12210	BUSHING-connecting rod, (0.50 mm under size) 20	(8)	(8)
	12119-10400.....	BUSHING-connecting rod, (0.75 mm under size) 30	(8)	(8)
	12120-10400.....	BUSHING-connecting rod, (1.00 mm under size) 40	(8)	(8)

CAMSHAFT & VALVE GEAR

Fig. 4

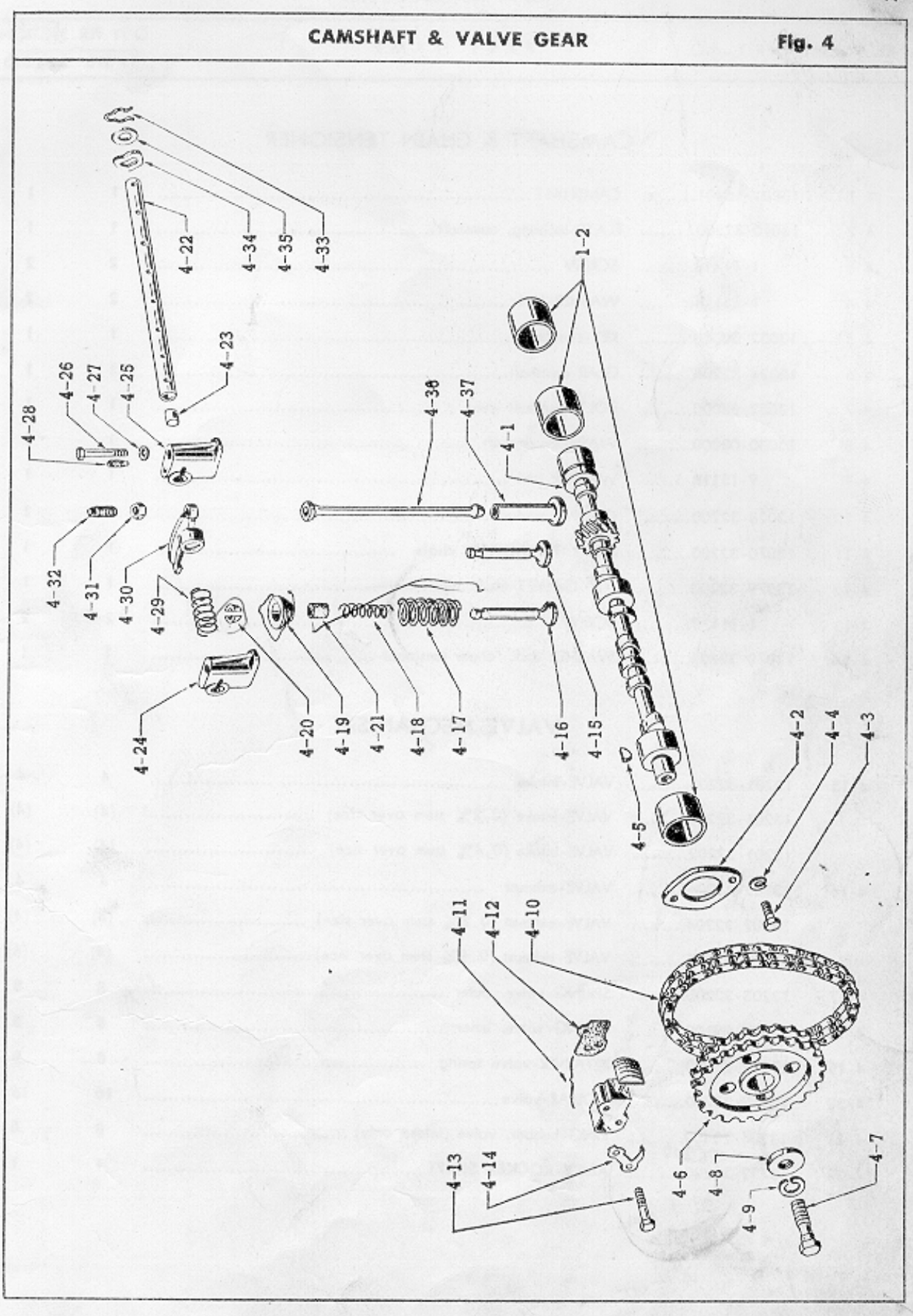

ILL. NO.	PART NO.	PART NAME	Q'TY PER SECTION SP310	Q'TY PER SECTION SPL310

CAMSHAFT & CHAIN TENSIONER

4-1	○ 13001-10401	CAMSHAFT	1	1
4-2	13010-32200	PLATE-locating, camshaft	1	1
4-3	1-11418	SCREW	2	2
4 4	1-15114	WASHER-lock	2	2
4-5	13032-30000	KEY-camshaft	1	1
4-6	13024-32200	GEAR-camshaft	1	1
4-7	13082-08000	BOLT-camshaft gear	1	1
4-8	13030-08000	WASHER-camshaft	1	1
4-9	9-15116-1	WASHER-lock	1	1
4-10	13028-32200	CHAIN-camshaft	1	1
4-11	13070-32200	**ASS'Y-TENSIONER, chain**	1	1
4-12	13079-32200	GASKET-chain tensioner	1	1
4-13	1-11438	SCREW	2	2
4-14	13078-32200	WASHER-lock, chain tensioner	1	1

VALVE MECHANISM

4-15	13201-32203	VALVE-intake	4	4
	13201-32201	VALVE-intake (0.2 mm stem over size)	(4)	(4)
	13201-32202	VALVE-intake (0.4 mm stem over size)	(4)	(4)
4-16	13202-~~32206~~ 32203	VALVE-exhaust	4	4
	13202-32204	VALVE-exhaust (0.2 mm stem over size)	(4)	(4)
	13202-32205	VALVE-exhaust (0.4 mm stem over size)	(4)	(4)
4-17	13203-32200	SPRING-valve, outer	8	8
4-18	13204-08100	SPRING-valve, inner	8	8
4-19	13209-08000	RETAINER-valve spring	8	8
4-20	13210-32200	COLLAR-valve	16	16
4-21	○ 13207-~~10400~~ 76200	RING-bubber, valve (intake only)	8	8
4-22	13252-32200	**ASS'Y-ROCKER SHAFT**	1	1

ILL. NO.	PART NO.	PART NAME	Q'TY PER SECTION SP310	SPL310
4-23	13254-58000.....	PLUG-expansion, rocker spindle	2	2
4-24	13222-32200.....	BRACKET-rocker shaft	3	3
4-25	13223-32200.....	BRACKET-rocker shaft (tapped)	1	1
4-26	001-14670[illegible].....	BOLT	4	4
4-27	9-15416.....	WASHER-plain.....	4	4
4-28	13226-58000.....	SCREW-set, rocker shaft	1	1
4-29	13256-58000.....	SPRING-inside, valve rocker.....	3	3
4-30	13258-32200.....	ROCKER-valve R.H. (D.C.I.).....	4	4
	13259-32200.....	ROCKER-valve L.H. (D.C.I.).....	4	4
4-31	13288-58000.....	NUT-valve rocker	8	8
4-32	13287-58000.....	SCREW-adjusting, valve rocker	8	8
4-33	13291-58000.....	CLIP-rocker shaft.....	2	2
4-34	13255-58000.....	SPRING-outside, valve rocker	2	2
4-35	13289-58000.....	WASHER-rocker shaft.....	2	2
4-36	13238-32200.....	ROD-push	8	8
4-37	13231-32200.....	LIFTER-valve	8	8

CYLINDER HEAD Fig. 5

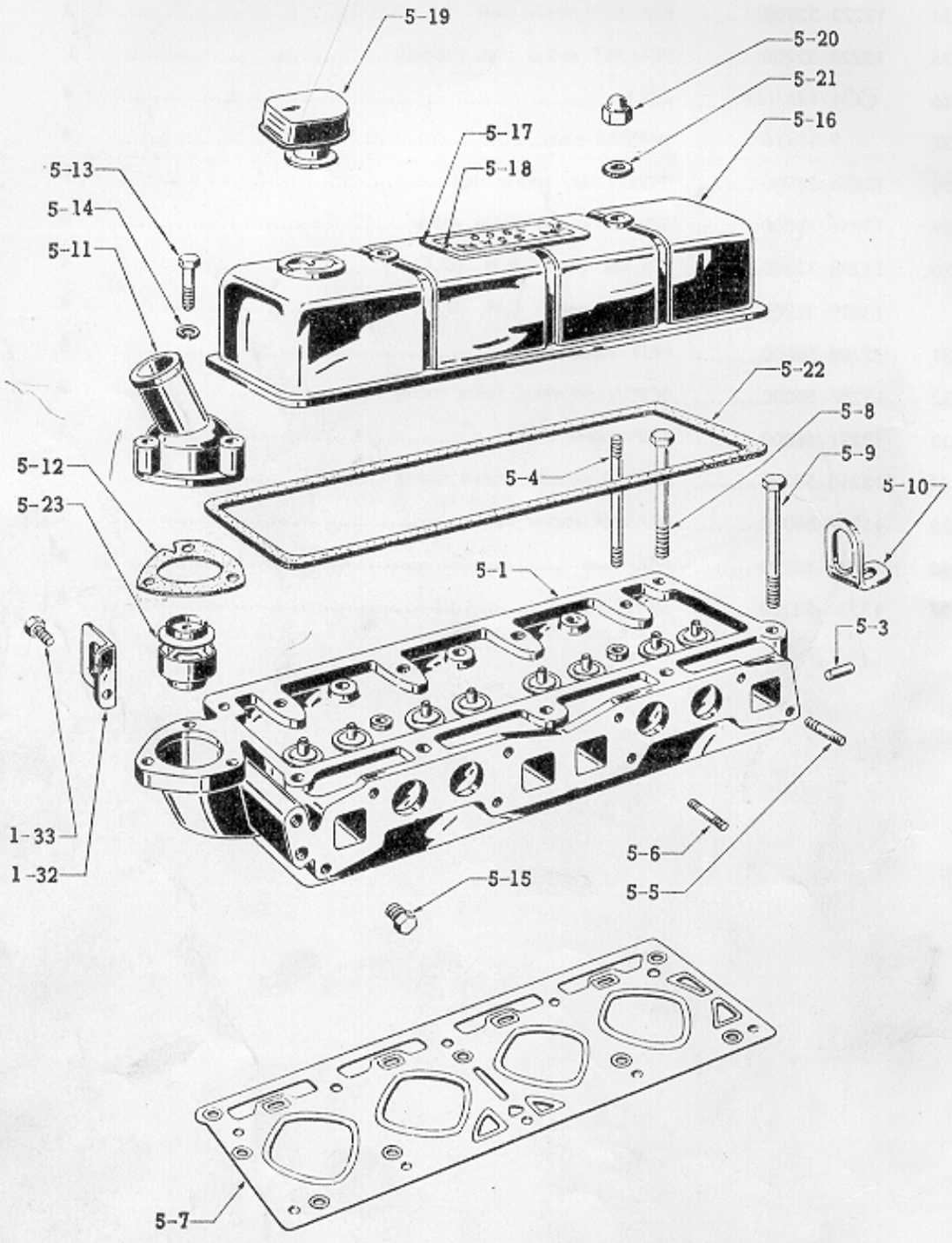

CYLINDER HEAD & ROCKER COVER

ILL. NO.	PART NO.	PART NAME	Q'TY PER SECTION SP310	Q'TY PER SECTION SPL310
5-1	11041-10400	**ASS'Y-HEAD, cylinder**	1	1
	11021-32200	PLUG-taper	1	1
5-3	11065-30000	PLUG-oil hole (brass)	2	2
5-4	11063-32200	STUD-rocker cover	2	2
5-5	2-14528	STUD	2	2
5-6	2-24532	STUD (manifold mounting, center)	2	2
5-7	11044-~~32200~~ 33100	GASKET-cylinder head	1	1
5-8	11056-32200	BOLT-cylinder head, short	9	9
5-9	11057-32200	BOLT-cylinder head, long	1	1
5-10	10006-32200	SLINGER-engine, rear	1	1
5-11	11060-10400	ELBOW-outlet	1	1
5-12	11062-30000	WASHER-joint, water outlet elbow	1	1
5-13	1-11540	BOLT } water outlet to elbow cylinder head	3	3
5-14	9-15115	WASHER-lock } water outlet to elbow cylinder head	3	3
5-15	9-31306	PLUG (heater outlet hole)	1	1
5-16	13264-10400	**ASS'Y-COVER, valve rocker**	1	1
5-17	13271-32200	PLATE-name, engine	1	1
5-18	13278-30000	RIVET-semi tubular	2	2
5-19	15255-10400	ASS'Y-OIL FILLER	1	1
5-20	13239-10400	NUT-cap	2	2
5-21	13228-10400	WASHER-cap nut	2	2
5-22	13270-~~32200~~ 36700	PACKING-rocker cover	1	1
5-23	21200-~~08001~~ 67000 78900	ASS'Y-THERMOSTAT	1	1

O.H. GSKS- 10101-12727
V.G. GSKS-11042-~~12217~~ 14625

MANIFOLD

Fig. 6

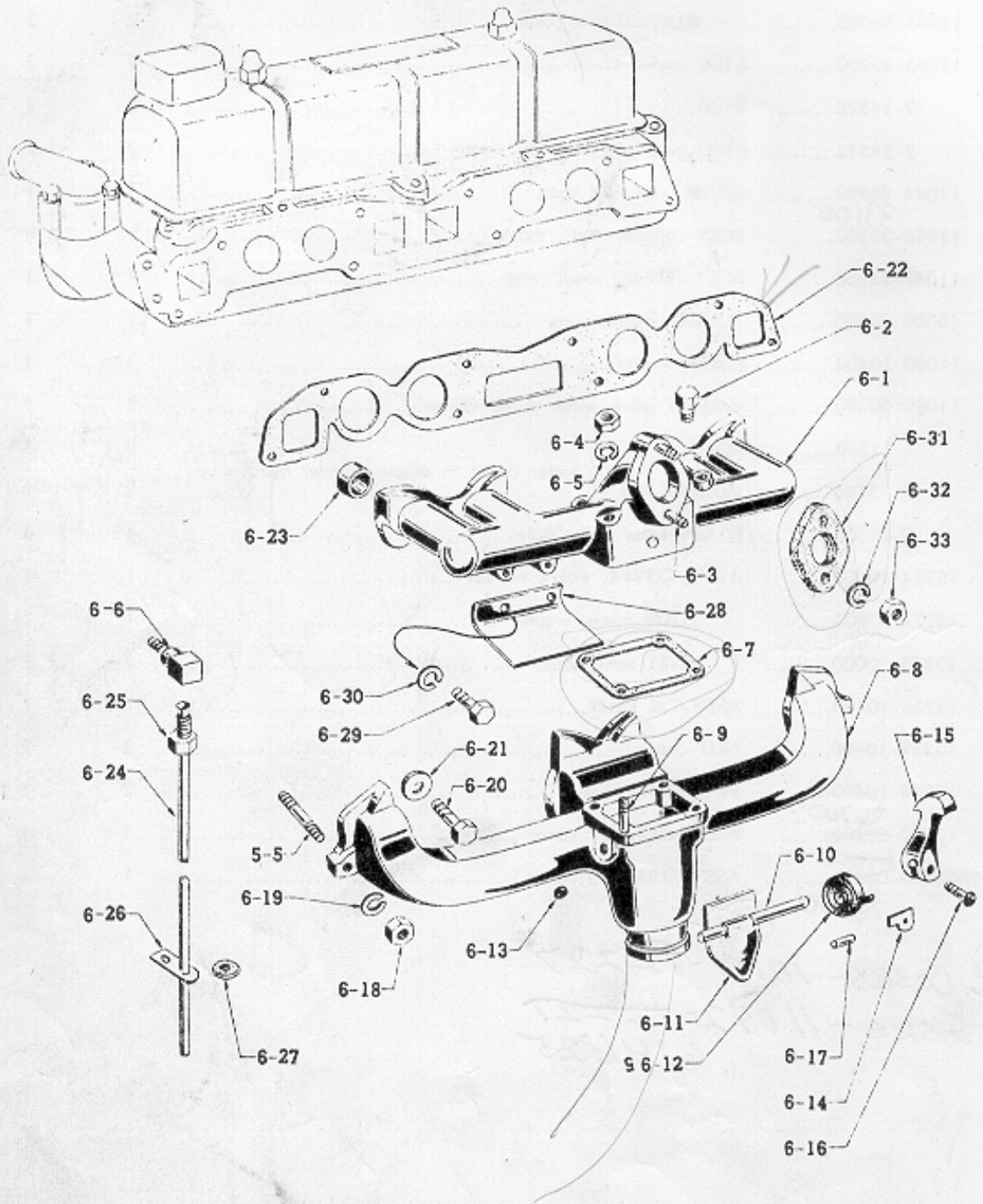

MANIFOLD

ILL. NO.	PART NO.	PART NAME	Q'TY PER SECTION SP310	Q'TY PER SECTION SPL310
6-1	○ 14003-10400	MANIFOLD-intake	1	1
6-2	11120-10460	PLUG-manifold 1/8"	1	1
6-3	2-14626	STUD (to fix carburetor)	4	4
6-4	9-11145	NUT } intaker to exhaust manifold	4	4
6-5	9-15115	WASHER-lock } intaker to exhaust manifold	4	4
6-6	○ 14007-10400	CONNECTOR-inverted angle	1	1
6-7	14005-32200	GASKET-intake to exhaust manifold	1	1
6-8	14004-10400	MANIFOLD-exhaust	1	1
6-9	2-14550	STUD	4	4
6-10	14020-32200	SHAFT-heat control	1	1
6-11	14021-10400	VALVE-heat control	1	1
6-12	14022-34200	SPRING-heat control, thermostat	1	1
6-13	14024-58000	BUSHING-heat control, valve	2	2
6-14	14025-85060	KEY-heat valve lever	1	1
6-15	14026-58000	COUNTER WEIGHT-heat control valve	1	1
6-16	3-14016-1	SCREW	1	1
6-17	14006-58000	PIN-heat control spring	1	1
6-18	9-11145-1	NUT } to fix manifold	4	4
6-19	9-15115	WASHER-lock } to fix manifold	2	2
6-20	9-21535	SCREW } to fix manifold	4	4
6-21	14037-32200	YOKE-manifold } to fix manifold	6	6
6-22	14035-32200	GASKET-manifold to cylinder head	1	1
6-23	14034-32200	COLLAR-intake manifold	2	2
6-24	○ 14009-10450	**TUBE-petrol drain**	1	1
6-25	22322-30000	NUT-tube	1	1
6-26	14012-34200	BRACKET-drain tube	1	1
6-27	14013-30000	INSULATOR-rubber	1	1
6-28	○ 14330-10400	PLATE-heat shield carburetor	1	1
6-29	1-11410	BOLT	2	2
6-30	9-15114	WASHER-lock	2	2
6-31	16174-10401	INSULATOR-carburetor	1	1
6-32	9-15116	WASHER-lock	2	2
6-33	9-11146	NUT	2	2

15010-32200 OIL PUMP & STRAINER Fig. 7

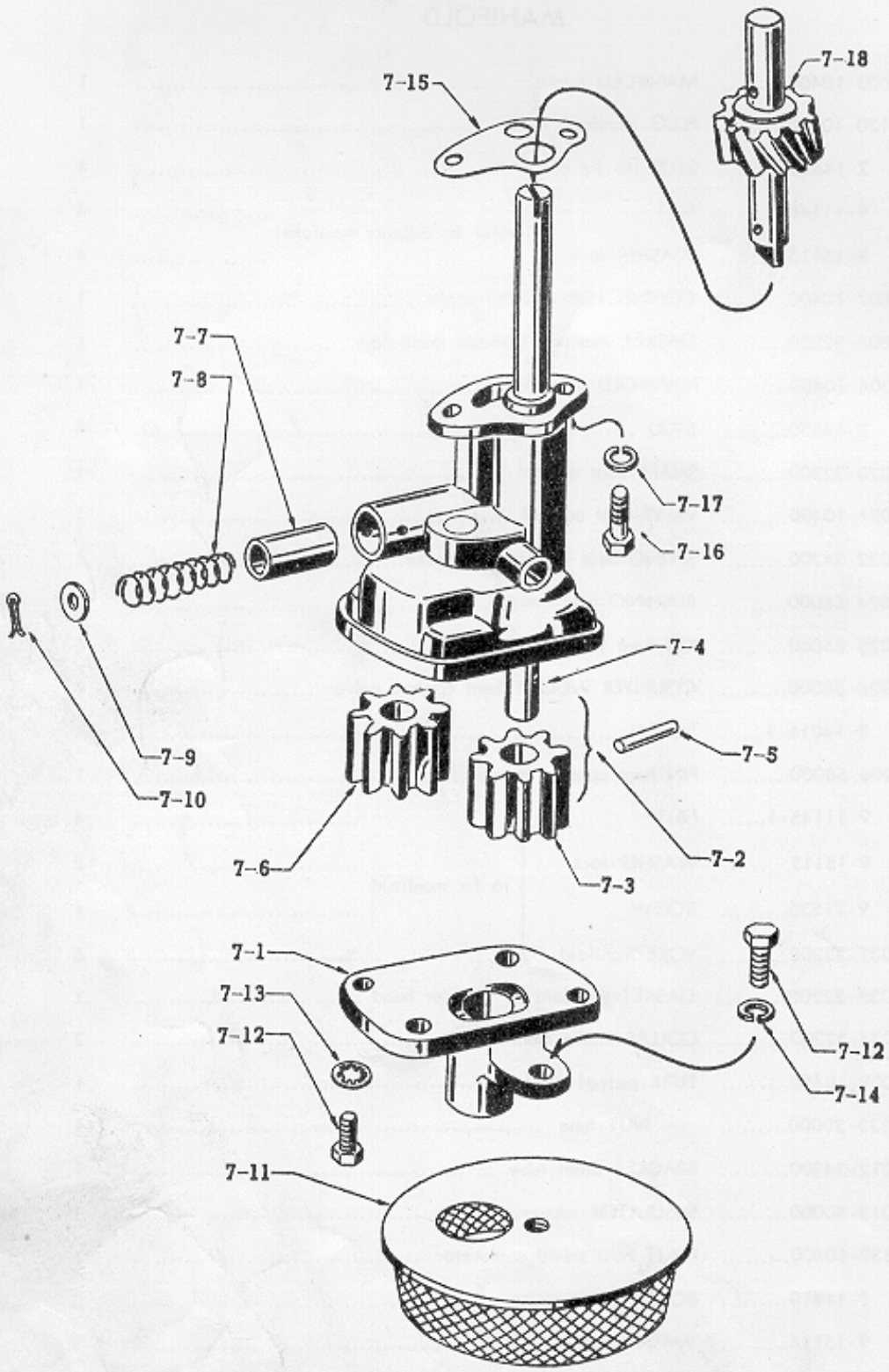

OIL PUMP

ILL. NO.	PART NO.	PART NAME	Q'TY PER SECTION SP310	Q'TY PER SECTION SPL310
	15010-32200	**ASS'Y-PUMP, oil with oil strainer**	1	1
7-1	15015-32200	COVER-oil pump	1	1
7-2	15020-32200	**ASS'Y-SHAFT, oil pump**	1	1
7-3	15021-32200	GEAR-drive, oil pump	1	1
7-4	15027-32200	SHAFT-oil pump	1	1
7-5	15030-32200	PIN-drive shaft	1	1
7-6	15023-32200	GEAR-drive, oil pump	1	1
7-7	15132-58000	VALVE-oil regulater	1	1
7-8	15133-58000	SPRING-valve, oil regulator	1	1
7-9	15136-58000	SHIM-oil regulator (1 mm)	1	1
	15137-58000	SHIM-oil regulator (2 mm)	1	1
7-10	9-21325	PIN-cotter	1	1
7-11	15050-32200	ASS'Y-STRAINER, oil	1	1
7-12	1-11414	BOLT	5	5
7-13	9-16114	WASHER-lock	4	4
7-14	9-15114	WASHER-lock	1	1
7-15	15066-32200	GASKET-oil pump to cylinder block	1	1
7-16	1-11522	BOLT (oil pump to cylinder block)	2	2
7-17	9-15115	WASHER-lock (oil pump to cylinder block)	2	2
7-18	15041-32200	ASS'Y-SPINDLE, driving, oil pump	1	1

15200-32201 **OIL FILTER** **Fig. 8**

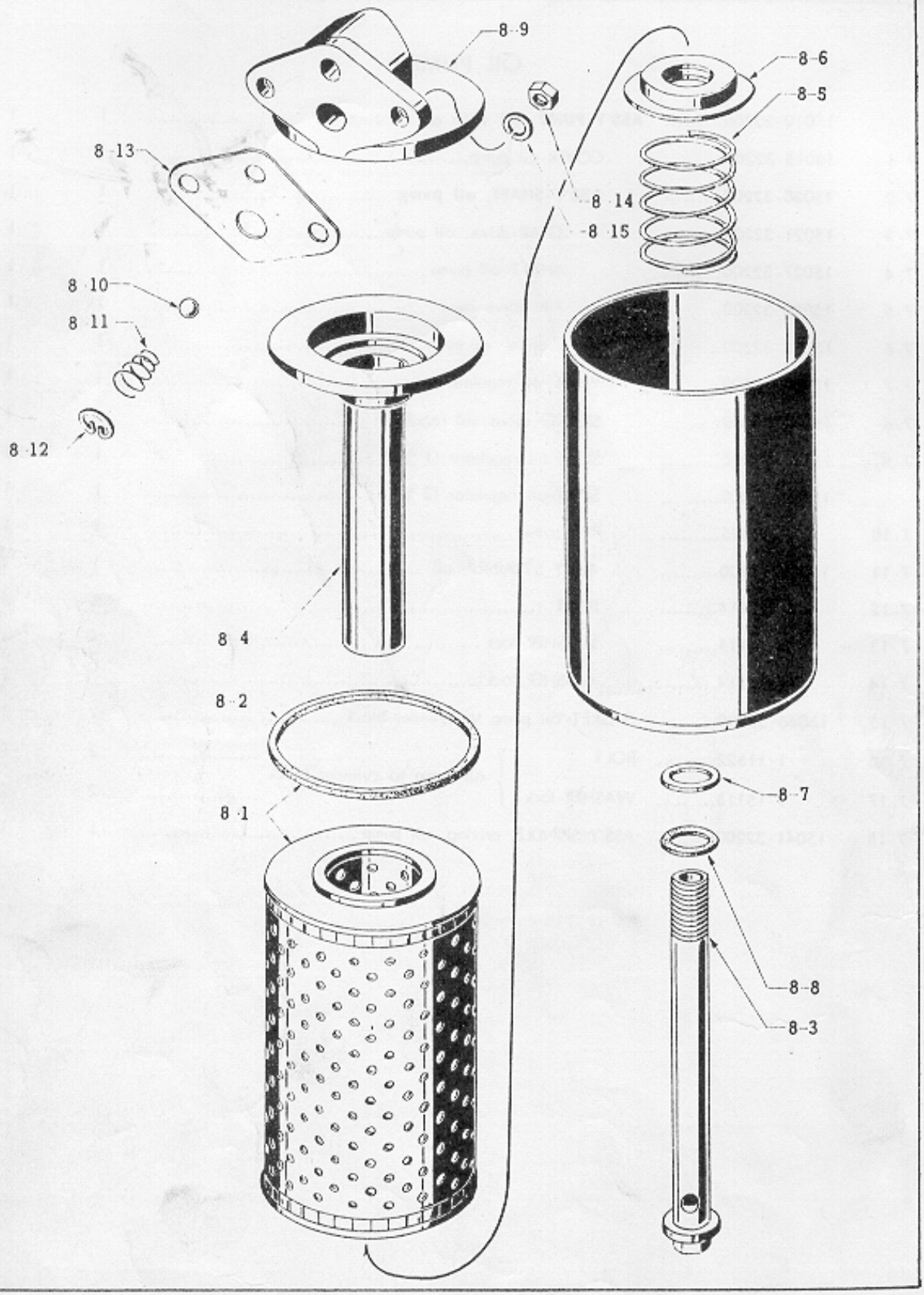

OIL FILTER

ILL. NO.	PART NO.	PART NAME	Q'TY PER SECTION SP310	Q'TY PER SECTION SPL310
	15200-32201	ASS'Y-FILTER, oil	1	1
8-1	15208-32250 (32225)	**ASS'Y-ELEMENT, oil filter, with gasket**	1	1
8-2	15223-30100	GASKET-oil filter body	1	1
8-3	15213-43800	ASS'Y-SHAFT, center	1	1
8-4	15229-32201	ASS'Y-SEAT, element	1	1
8-5	15224-43800	SPRING-set, element	1	1
8-6	15227-43800	RETAINER-element	1	1
8-7	15228-43800	" O " RING-retainer	1	1
8-8	15230-43800	GASKET-filter, body top	1	1
8-9	15238-32201	BRACKET-oil filter	1	1
8-10	15300-32200	VALVE-safty	1	1
8-11	15301-32200	SPRING-safty valve	1	1
8-12	15302-32201	RING-snap	1	1
8-13	15239-32200	GASKET-oil filter to cylinder block	1	1
8-14	9-11146	NUT	2	2
8-15	9-15116	WASHER-lock	2	2

16010-10402 **CARBURETOR** **Fig. 9**

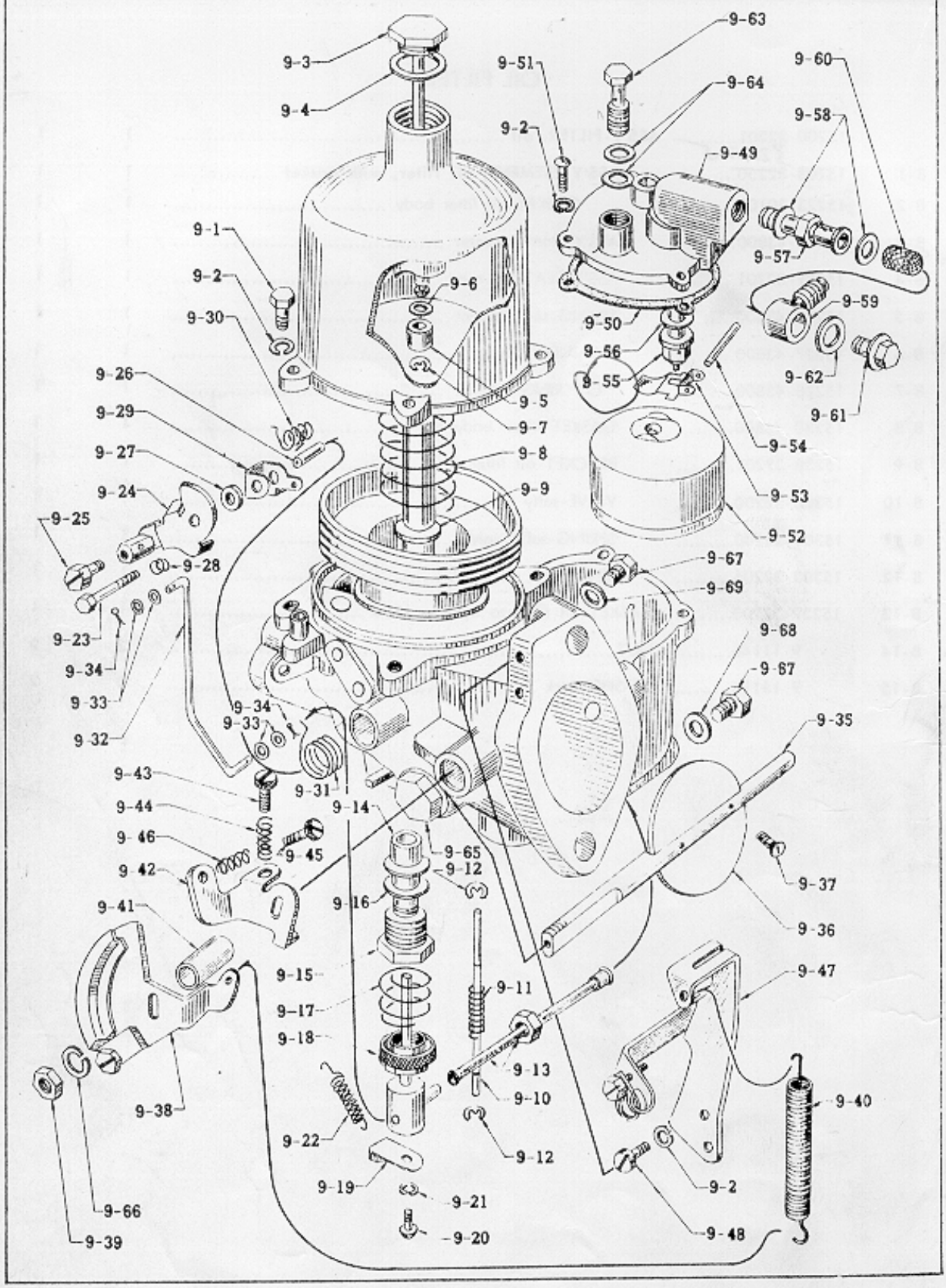

ILL. NO.	PART NO.	PART NAME	Q'TY PER SECTION SP310	Q'TY PER SECTION SPL310
	○ 16010-10402.....	**ASS'Y-CARBURETOR**	1	1
9-1	16185-10560.....	BOLT 5 ϕ	4	4
9-2	- 16086-00100.....	WASHER-spring 5 ϕ	10	10
9-3	○ 16341-10400.....	NUT-oil cup	1	1
9-4	○ 16342-10400.....	PACKING 18 ϕ	1	1
9-5	○ 16343-10400.....	PLUNGER-oil damper	1	1
9-6	○ 16344-10400.....	WASHER-oil damiper	1	1
9-7	○ 16345-10400.....	RING "C"	1	1
9-8	○ 16346-10400.....	SPRING-suction	1	1
9-9	○ 16347-10400.....	PACKING-nylon 12.5 ϕ	1	1
9-10	○ 16324-10400.....	LIFTER-piston	1	1
9-11	○ 16325-10400.....	SPRING-piston lifter	1	1
9-12	○ 16326-10400.....	RING "E" # 6	2	2
9-13	○ 16350-10400.....	ASS'Y-NOZZLE	1	1
9-14	○ 16351-10400.....	SLEEVE-nozzle	1	1
9-15	○ 16027-10400.....	SCREW-set, nozzle sleeve	1	1
9-16	○ 16130-10400.....	WASHER 10 ϕ	1	1
9-17	○ 16145-10400.....	SPRING-idle, adjust screw	1	1
9-18	○ 16144-10400.....	NUT-adjusting, idler	1	1
9-19	○ 16353-10400.....	HANGER-spring	1	1
9-20	○ 16065-10400.....	SCREW 4 ϕ	1	1
9-21	16220-30100.....	WASHER 4 ϕ	1	1
9-22	○ 16352-10400.....	SPRING-nozzle	1	1
9-23	○ 16185-10400.....	BOLT 5 ϕ	1	1
9-24	○ 16238-10400.....	LEVER-starter	1	1
9-25	16164-85060.....	BOLT 5 ϕ	1	1
9-26	○ 16116-10400.....	SLEEVE	1	1
9-27	○ 16217-10400.....	WASHER 7 ϕ	1	1
9-28	○ 16215-10405.....	WASHER-spring 7 ϕ	1	1
9-29	○ 16082-10400.....	LEVER-connecting	1	1
9-30	○ 16085-10400.....	SPRING-connecting	1	1
9-31	○ 16190-10400.....	SPRING-return, starter lever	1	1

CARBURETOR

ILL. NO.	PART NO.	PART NAME	Q'TY PER SECTION SP310	Q'TY PER SECTION SPL310
9-32	16248-10400.....	ROD-connecting	1	1
9-33	16215-10400.....	WASHER 3φ	4	4
9-34	16091-10560.....	PIN-cotter 1φ.....	2	2
9-35	16276-10400.....	SHAFT-throttle	1	1
9-36	16120-10400.....	VALVE-throttle	1	1
9-37	16121-85060.....	SCREW-set, valve 4φ.....	2	2
9-38	16134-10400.....	LEVER-throttle	1	1
9-39	16124-85060.....	NUT-throttle shaft 8φ.....	1	1
9-40	16194-10400.....	SPRING-throttle	1	1
9-41	16306-10400.....	PIECE-distant	1	1
9-42	16127-10400.....	PLATE-adjusting, throttle	1	1
9-43	16114-10400.....	SCREW-adjusting, throttle "B"	1	1
9-44	16193-10400.....	SPRING-adjusting, throttle screw	1	1
9-45	16129-85060.....	SCREW-adjusting, throttle "A"	1	1
9-46	16145-85060.....	SPRING-adjusting, throttle screw	1	1
9-47	16247-10400.....	ARM-wire, throttle	1	1
9-48	16065-25661.....	SCREW 5φ	2	2
9-49	16125-10400.....	COVER-float chamber	1	1
9-50	16064-10400.....	GASKET-float chamber cover.....	1	1
9-51	16065-85060.....	SCREW-set 5φ	4	4
9-52	16061-10400.....	FLOAT	1	1
9-53	16062-10400.....	LEVER-float	1	1
9-54	16066-10400.....	SHAFT-float lever	1	1
9-55	16101-10400.....	VALVE-needle 2φ	1	1
9-56	16094-10400.....	WASHER 10φ	1	1
9-57	16092-10400.....	BOLT-filter	1	1
9-58	16094-85060.....	PACKING 12φ.....	2	2
9-59	16111-08000.....	NIPPLE	1	1
9-60	16098-08000.....	FILTER	1	1
9-61	16108-08000.....	SCREW-set, filter.....	1	1
9-62	16094-08000.....	WASHER 8φ	1	1
9-63	16331-10400.....	SCREW-set, nipple	1	1

ILL. NO.	PART NO.	PART NAME	Q'TY PER SECTION SP310	Q'TY PER SECTION SPL310
9-64	○ 16335-10400.....	PACKING 10φ	2	2
9-65	○ 16322-10400.....	BOLT 8φ	1	1
9-66	○ 16086-30100.....	WASHER-spring 8φ	2	2
9-67	16031-10560.....	PLUG-drain	1	1
9-68	○ 16060-10400.....	WASHER 8φ	1	1
9-69	16060-85060.....	WASHER 8φ	1	1

AIR CLEANER

Fig. 10

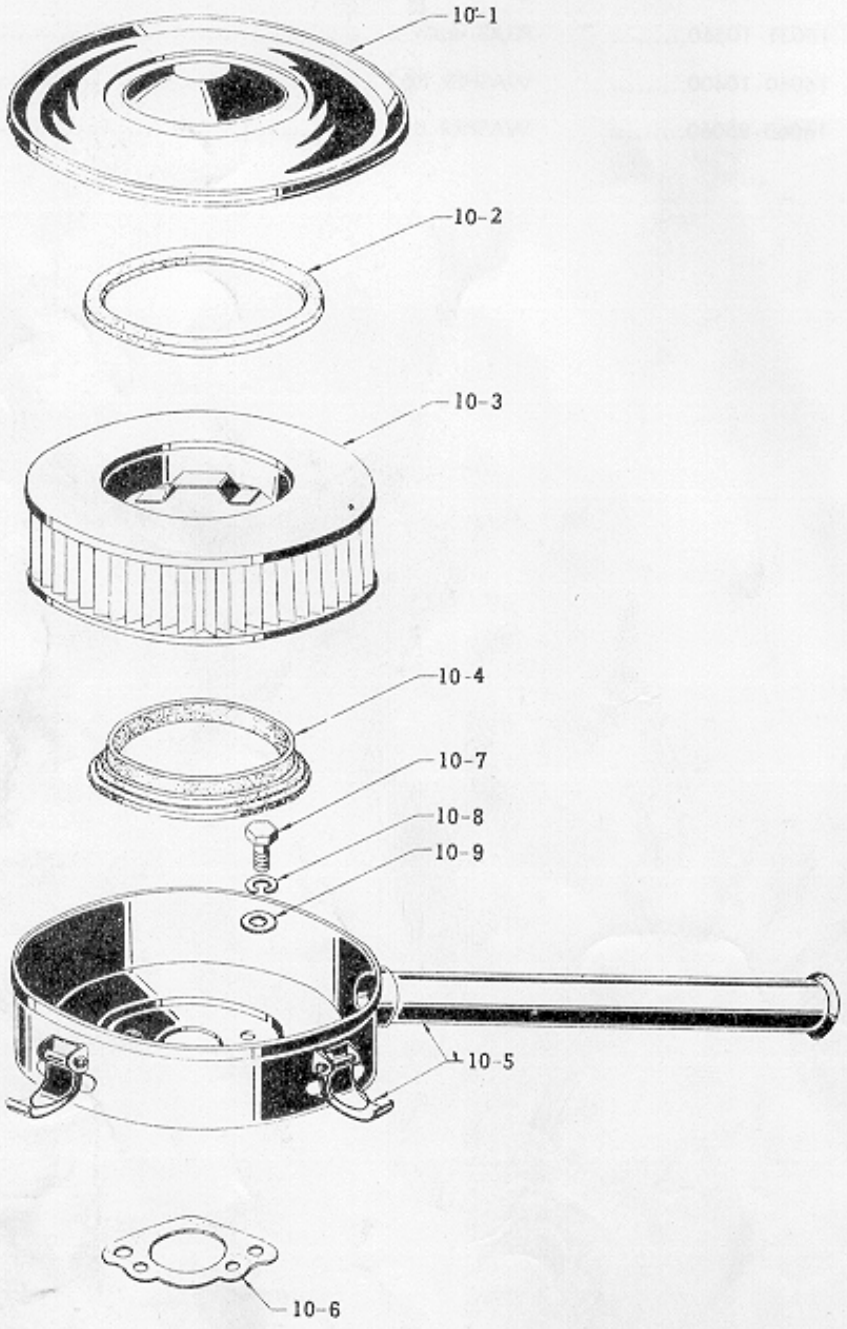

ILL. NO.	PART NO.	PART NAME	Q'TY PER SECTION SP310	Q'TY PER SECTION SPL310
	◦ 16500-10400.....	ASS'Y-CLEANER, air	1	-
	◦ 16500-10500.....	ASS'Y-CLEANER, air	U-1	1
10-1	◦ 16526-10400.....	ASS'Y-COVER	1	1
10-2	◦ 16536-10400.....	PACKING	1	1
10-3	◦ 16546-10400.....	ASS'Y-ELEMENT, paper	1	1
10-4	◦ 16547-10400.....	PACKING	1	1
10-5	◦ 16528-10400.....	ASS'Y-BODY	1	-
	◦ 16528-10500.....	ASS'Y-BODY	U-1	1
10-6	◦ 16523-10400.....	GASKET-carburetor to air cleaner	1	1
10-7	1-14516-1.....	BOLT	2	2
10-8	9-15115.....	WASHER-lock } carburetor to air cleaner	2	2
10-9	9-15415-1.....	WASHER-plain	2	2

AIR CLEANER

17010-10400 **FUEL PUMP** **Fig. 11**

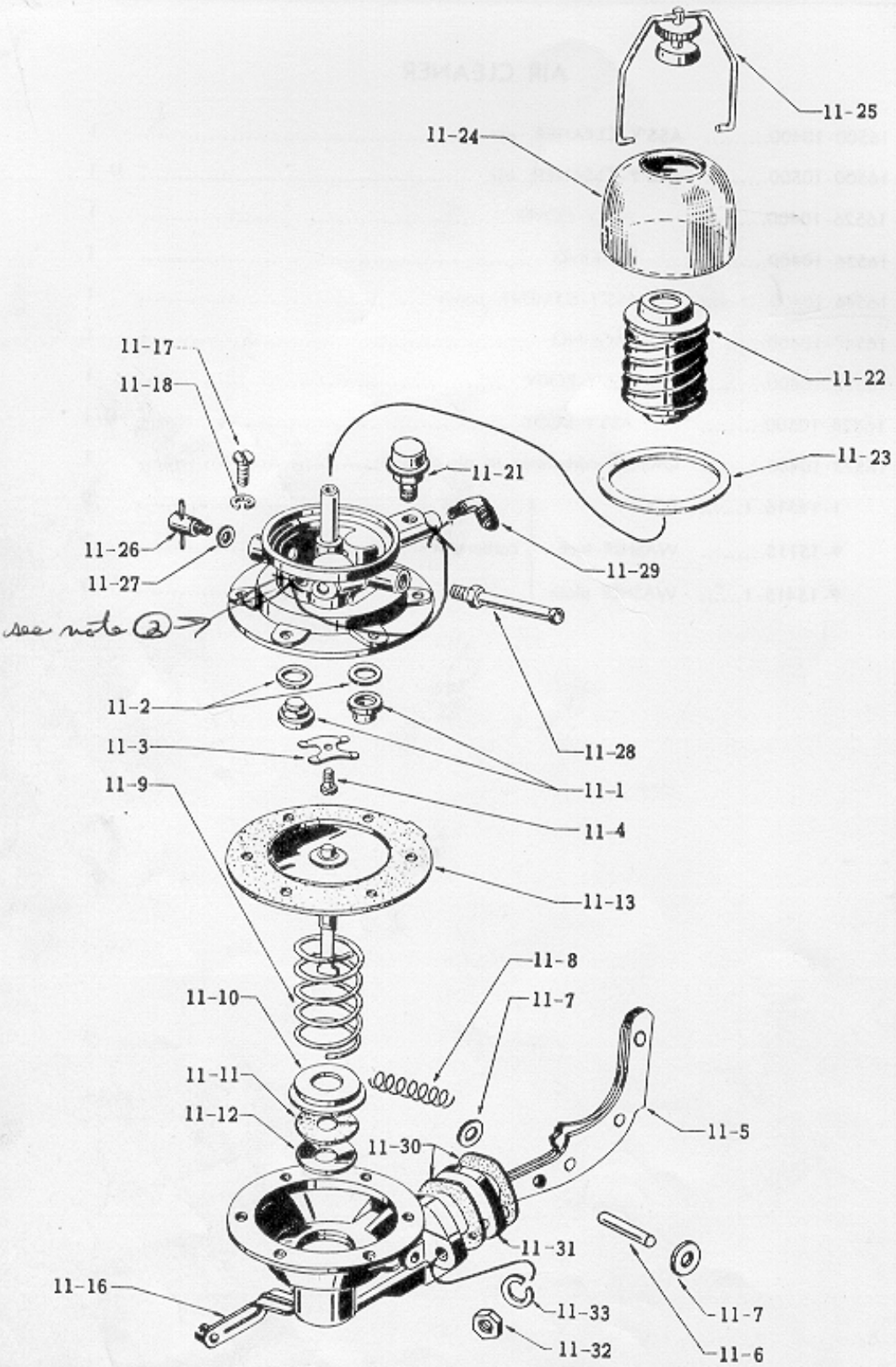

FUEL PUMP

① use old fittings
② Rotate tab on base to have inlet clear block

ILL. NO.	PART NO.	PART NAME	Q'TY PER SECTION SP310	Q'TY PER SECTION SPL310
	17010-~~10400~~ 37000	ASS'Y-PUMP, fuel	1	1
11-1	17065-52600	ASS'Y-VALVE, fuel pump	2	2
11-2	17061-50000	PACKING-valve	2	2
11-3	17072-32200	RETAINER-valve	1	1
11-4	17075-50000	SCREW-retainer (KYOSAN)	1	1
	17075-32200	SCREW-retainer (SHOWA)		
11-5	17015-32200	ASS'Y-ARM, rocker	1	1
11-6	17019-85600	PIN-rocker arm (KYOSAN)	1	1
	17019-50000	PIN-rocker arm (SHOWA)		
11-7	17016-00100	SPACER-side rocker arm	2	2
11-8	17020-85060	SPRING-rocker arm (KYOSAN)	1	1
	17020-00100	SPRING-rocker arm (SHOWA)		
11-9	17052-30100	SPRING-diaphragm	1	1
11-10	17049-50000	CAP-packing, lower body	1	1
11-11	17048-52600	GASKET-lower body	1	1
11-12	17047-50000	PACKING-seat, lower body	1	1
11-13	17053-32200	ASS'Y-DIAPHRAGM	1	1
	17040-32200	PIN-hand primer (KYOSAN)	1	1
	17040-32201	PIN-hand primer (SHOWA)		
	16028-87860	WASHER-hand primer pin	1	1
11-16	17022-32200	LEVER-hand primer (KYOSAN)	1	1
	17022-32201	LEVER-hand primer (SHOWA)		
11-17	17089-58000	SCREW-setting, body	6	6
11-18	17090-32200	WASHER-spring, to set body (KYOSAN)	6	6
	17090-50000	WASHER-spring, to set body (SHOWA)		
11-21	17078-32200	ASS'Y-DOME, air	1	1
11-22	16403-32200	ASS'Y-ELEMENT, filter	1	1
11-23	16407-32200	PACKING-fuel strainer	1	1
11-24	16402-32200	BOWL-glass	1	1
11-25	16440-32200	ASS'Y-BAIL, bowl	1	1
11-26	17087-32201	ASS'Y-PLUG, drain	1	1

ILL. NO.	PART NO.	PART NAME	Q'TY PER SECTION SP310	Q'TY PER SECTION SPL310
11-27	17088-32200.....	PACKING-drain plug	1	1
11-28	17103-01300.....	CONNECTOR-fuel pump to strainer	1	1
11-29	17103-50000.....	CONNECTOR-angle flared tube	1	1
11-30	17099-30000.....	WASHER-joint, fuel pump	2	2
11-31	16420-30100.....	SPACER-fuel pump to cylinder block	1	1
11-32	9-11145.....	NUT	2	2
11-33	9-15115.....	WASHER-lock	2	2
	17522-10400.....	ASS'Y-TUBE, fuel pump to carburetor	1	1
	17106-32200.....	CLAMP-tube, pump to carburetor	1	1

FUEL TANK MOUNTING

Fig. 12

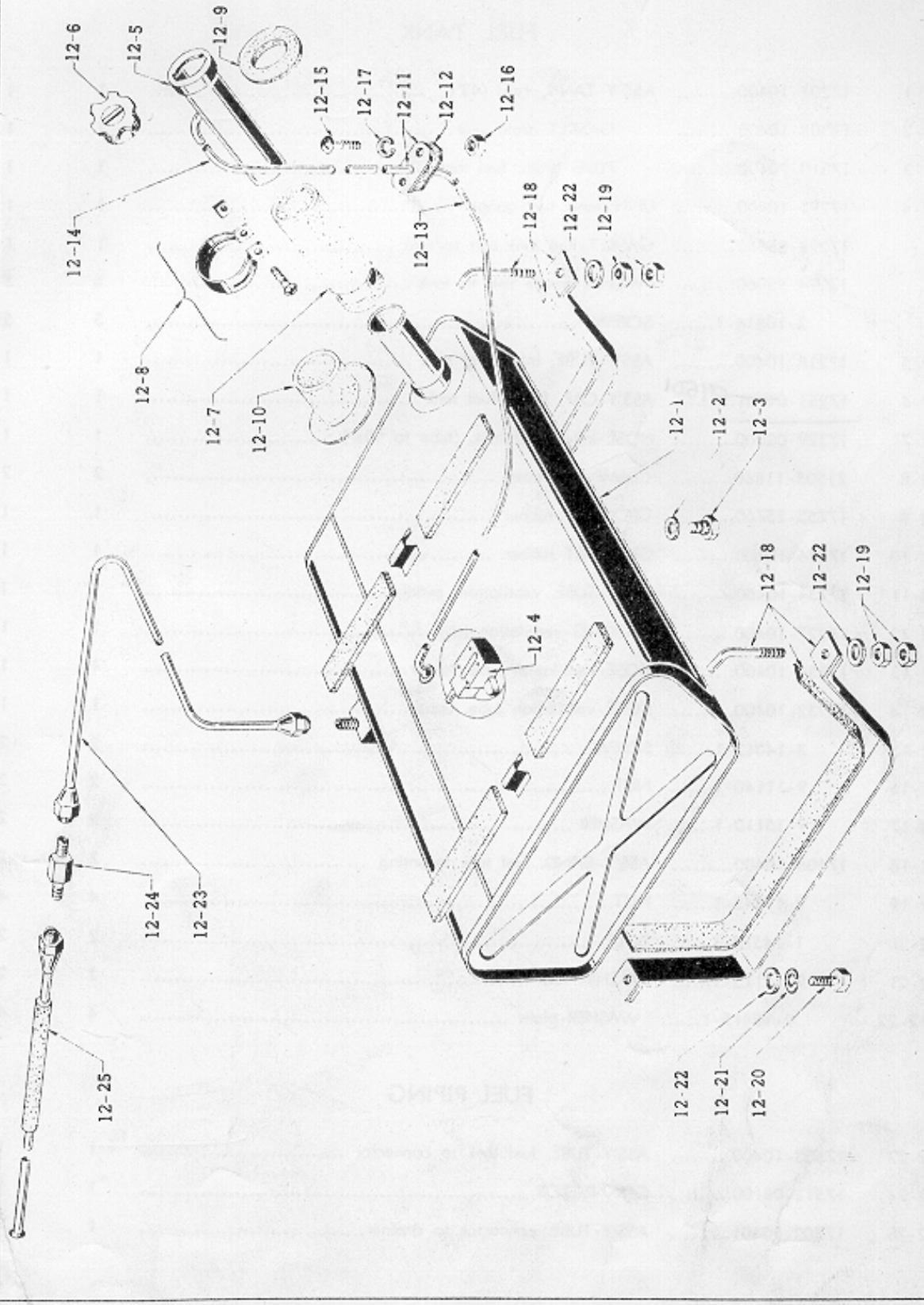

ILL. NO.	PART NO.	PART NAME	Q'TY PER SECTION SP310	Q'TY PER SECTION SPL310
		FUEL TANK		
12-1	○ 17201-10400	ASS'Y-TANK, fuel (43 l)	1	1
12-2	○ 17308-10400	GASKET-drain seat	1	1
12-3	○ 17310-10400	PLUG-drain, fuel tank	1	1
12-4	○ 17291-10400	UNIT-tank, fuel gauge	1	1
	17293-85660	GASKET-fuel tank unit to tank	1	1
	17294-85060	WASHER-gauge unit to tank	5	5
	3-10816-1	SCREW	5	5
12-5	○ 17218-10400	ASS'Y-TUBE, inlet, fuel tank	1	1
12-6	17251-04101 C9501	ASS'Y-CAP, filler, fuel tank	1	1
12-7	17229-08000	HOSE-inllet, fuel tank, (tube to filler)	1	1
12-8	21505-11860	CLAMP-gum hose	2	2
12-9	17455-25760	GROMMET-rubber	1	1
12-10	○ 17456-10400	GROMMET-rubber	1	1
12-11	○ 17234-10400	ASS'Y-TUBE, ventilation, middle	1	1
12-12	○ 17227-10400	PACKING-ventilation tube	1	1
12-13	○ 17231-10400	HOSE-ventilation tube, lower	1	1
12-14	○ 17232-10400	HOSE-ventilation tube, upper	1	1
12-15	3-14012-1	SCREW	2	2
12-16	9-11140-1	NUT	2	2
12-17	9-15110-1	WASHER	2	2
12-18	○ 17406-10400	ASS'Y-BAND, fuel tank mounting	2	2
12-19	9-11345-1	NUT	4	4
12-20	1-14518-1	BOLT	2	2
12-21	9-15115-1	WASHER-lock	2	2
12-22	9-15415-1	WASHER-plain	4	4
		FUEL PIPING		
12-23	○ 17503-10400	ASS'Y-TUBE, fuel tank to connector	1	1
12-24	17512-09100	CONNECTOR	1	1
12-25	17502-10401	ASS'Y-TUBE, connector to strainer	1	1

ACCELERATOR

Fig. 13

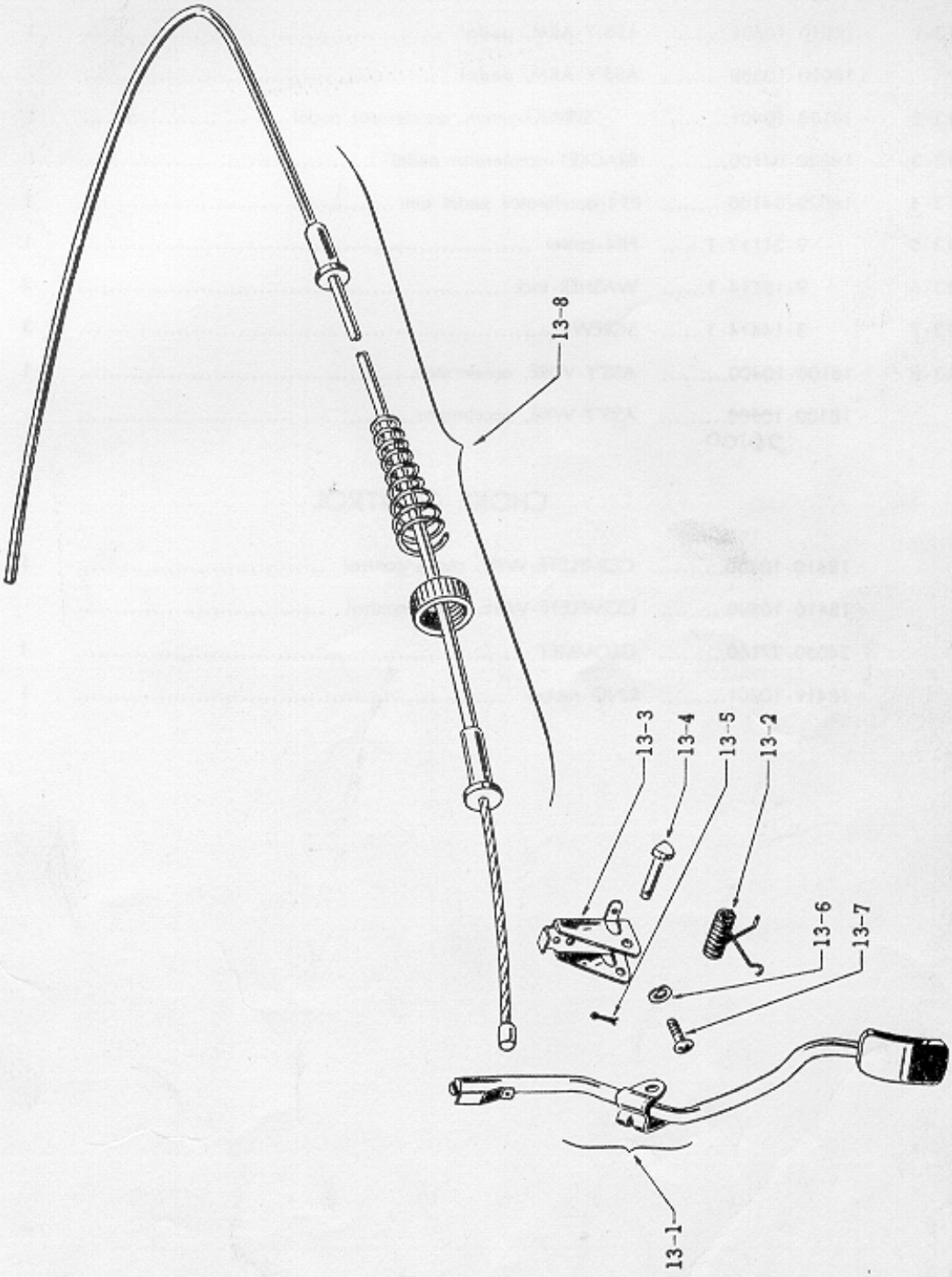

ILL. NO.	PART NO.	PART NAME	Q'TY PER SECTION SP310	Q'TY PER SECTION SPL310

ACCELERATOR

13-1	○ 18010-10401.....	**ASS'Y-ARM, pedal**	1	-
	○ 18010-10500.....	**ASS'Y-ARM, pedal**	-	1
13-2	○ 18138-10401.....	SPRING-return, accelerator pedal	1	1
13-3	18020-04100.....	BRACKET-accelerator pedal	1	1
13-4	18022-04100.....	PIN-accelerator pedal arm	1	1
13-5	9-21112-1.....	PIN-cotter	1	1
13-6	9-15114-1.....	WASHER-lock	3	3
13-7	3-14414-1.....	SCREW	3	3
13-8	○ 18100-10400.....	ASS'Y-WIRE, accelerator.....	1	-
	○ 18100-~~10500~~ 26100.....	ASS'Y-WIRE, accelerator.....	-	1

CHOKE CONTROL

	○ 18410-10400.....	COMPLETE-WIRE, choke control	1	
	○ 18410-10500.....	COMPLETE-WIRE, choke control		1
	24050-27160.....	GROMMET	1	1
	○ 18419-10401.....	RING-rubber	1	1

MUFFLER MOUNTING

Fig. 14

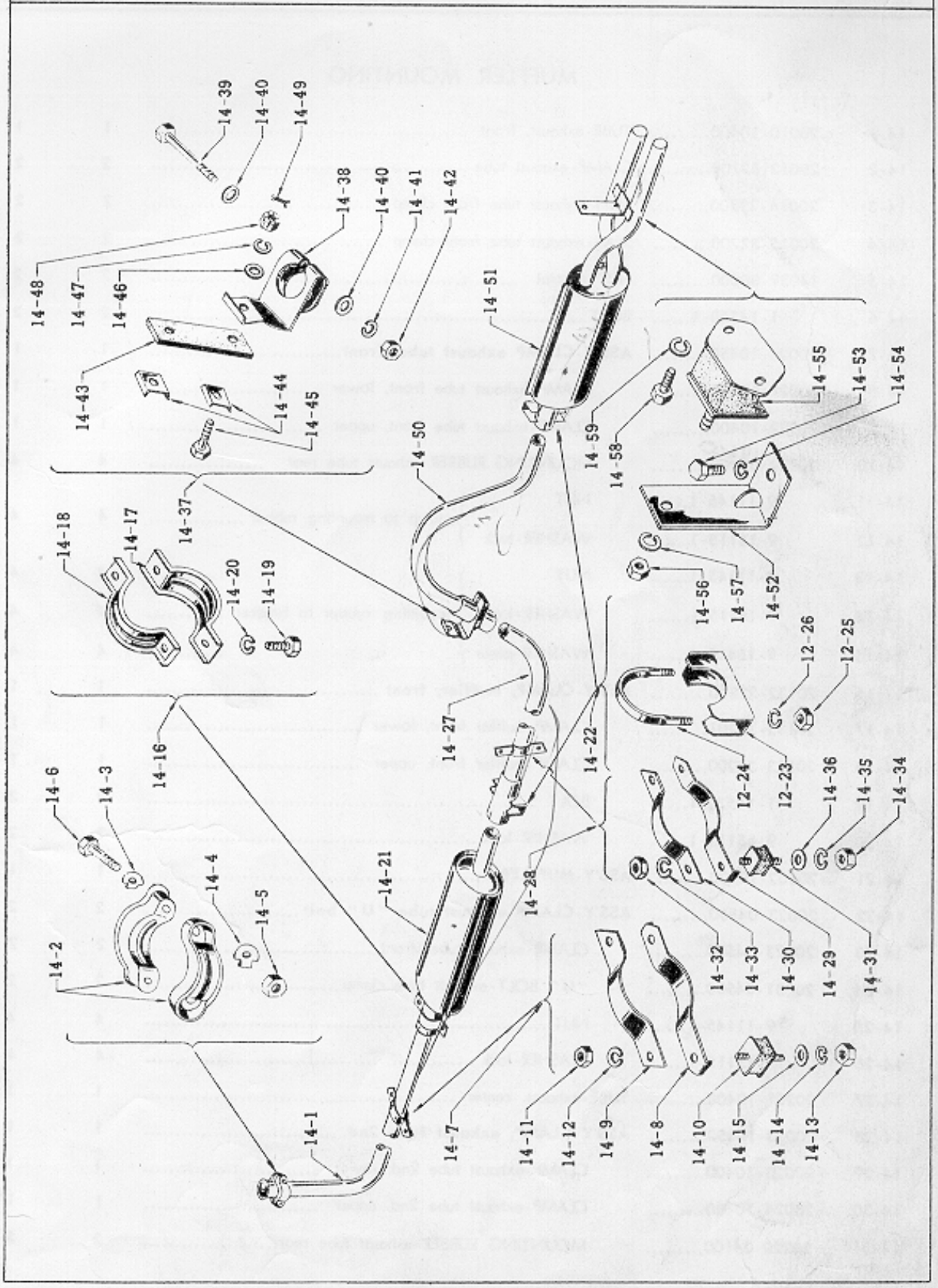

MUFFLER MOUNTING

ILL. NO.	PART NO.	PART NAME	Q'TY PER SECTION SP310	SPL310
14-1	○ 20010-10400	TUBE-exhaust, front	1	1
14-2	20013-32200	CLAMP-exhaust tube	2	2
14-3	20014-32200	SEAT-exhaust tube front clamp	2	2
14-4	20015-32200	SEAT-exhaust tube front clamp	2	2
14-5	14039-30000	NUT-special	2	2
14-6	1-14560-1	BOLT	2	2
14-7	○ 20021-10450	**ASS'Y-CLAMP exhaust tube, front**	1	1
14-8	○ 20021-10400	CLAMP-exhaust tube front, lower	1	1
14-9	○ 20022-10400	CLAMP-exhaust tube front, upper	1	1
14-10	20220-04100	MOUNTING RUBBER-exhaust tube rear	4	4
14-11	9-11145-1	NUT } clamp to mounting rubber	4	4
14-12	9-15115-1	WASHER-lock }		
14-13	9-11145-1	NUT }	4	4
14-14	9-15115-1	WASHER-lock } mounting rubber to bracket	4	4
14-15	9-15415-1	WASHER-plain }	4	4
14-16	20132-32250	**ASS'Y-CLAMP, muffler, front**	1	1
14-17	20132-32201	CLAMP-muffler front, lower	1	1
14-18	20133-32200	CLAMP-muffler front, upper	1	1
14-19	1-14522-1	BOLT	2	2
14-20	9-15115-1	WASHER-lock	2	2
14-21	○ 20102-10400	**ASS'Y-MUFFLER**	1	1
14-22	20023-04550	**ASS'Y-CLAMP exhaust tube "U" bolt**	2	2
14-23	20023-04500	CLAMP-exhaust tube, front	2	2
14-24	20031-04500	"U" BOLT-exhaust tube clamp	2	2
14-25	9-11145-1	NUT	4	4
14-26	9-15115-1	WASHER-lock	4	4
14-27	○ 20201-10400	TUBE-exhaust, center	1	1
14-28	○ 20023-10450	**ASS'Y-CLAMP, exhaust tube 2nd**	1	1
14-29	○ 20023-10400	CLAMP-exhaust tube 2nd, lower	1	1
14-30	○ 20024-10400	CLAMP-exhaust tube 2nd, upper	1	1
14-31	20220-04100	MOUNTING RUBBER-exhaust tube rear	2	2

ILL. NO.	PART NO.	PART NAME	Q'TY PER SECTION SP310	Q'TY PER SECTION SPL310
14-32	9-11145-1.....	NUT } clamp to mounting rubber	2	2
14-33	9-15115-1.....	WASHER-lock } clamp to mounting rubber	2	2
14-34	9-11145-1.....	NUT } mounting rubber to bracket	2	2
14-35	9-15115-1.....	WASHER-lock } mounting rubber to bracket	2	2
14-36	9-15415-1.....	WASHER-plain } mounting rubber to bracket	2	2
14-37	○ 20641-10450.....	**ASS'Y-CLAMP, exhaust tube center**	1	1
14-38	○ 20641-10400.....	CLAMP-exhaust tube	1	1
14-39	1-14570-1.....	BOLT	1	1
14-40	9-15415-1.....	WASHER-plain.....	2	2
14-41	9-15115-1.....	WASHER-lock	1	1
14-42	9-11145-1.....	NUT.....	1	1
14-43	20133-10400.....	STRAP-exhaust tube hanger.....	1	1
14-44	○ 20136-30100.....	WASHER- "B"	2	2
14-45	1-14422-11 ...	BOLT	1	1
	1-14424-11 ...	BOLT	1	1
14-46	9-15414-1.....	WASHER-plain.....	2	2
14-47	9-15114-1.....	WASHER-lock	2	2
14-48	9-11744-1.....	NUT	2	2
14-49	9-21015-1.....	PIN-cotter	2	2
14-50	20211-10401.....	TUBE-exhaust rear	1	1
14-51	20300-10450.....	**ASS'Y-BOOSTER with tail pipe clamp**	1	1
14-52	20216-10401.....	HANGER-exhaust tube, rear	1	1
14-53	1-14516-1.....	BOLT	1	1
14-54	9-15115-1.....	WASHER-lock	1	1
14-55	11328-30001.....	COMPLETE-MOUNTING, engine rear	1	1
14-56	9-11145-1.....	NUT	1	1
14-57	9-15115-1.....	WASHER-lock	1	1
14-58	1-14516-1.....	BOLT	2	2
14-59	9-15115-1.....	WASHER-lock	2	2

21010-32200 WATER PUMP Fig. 15

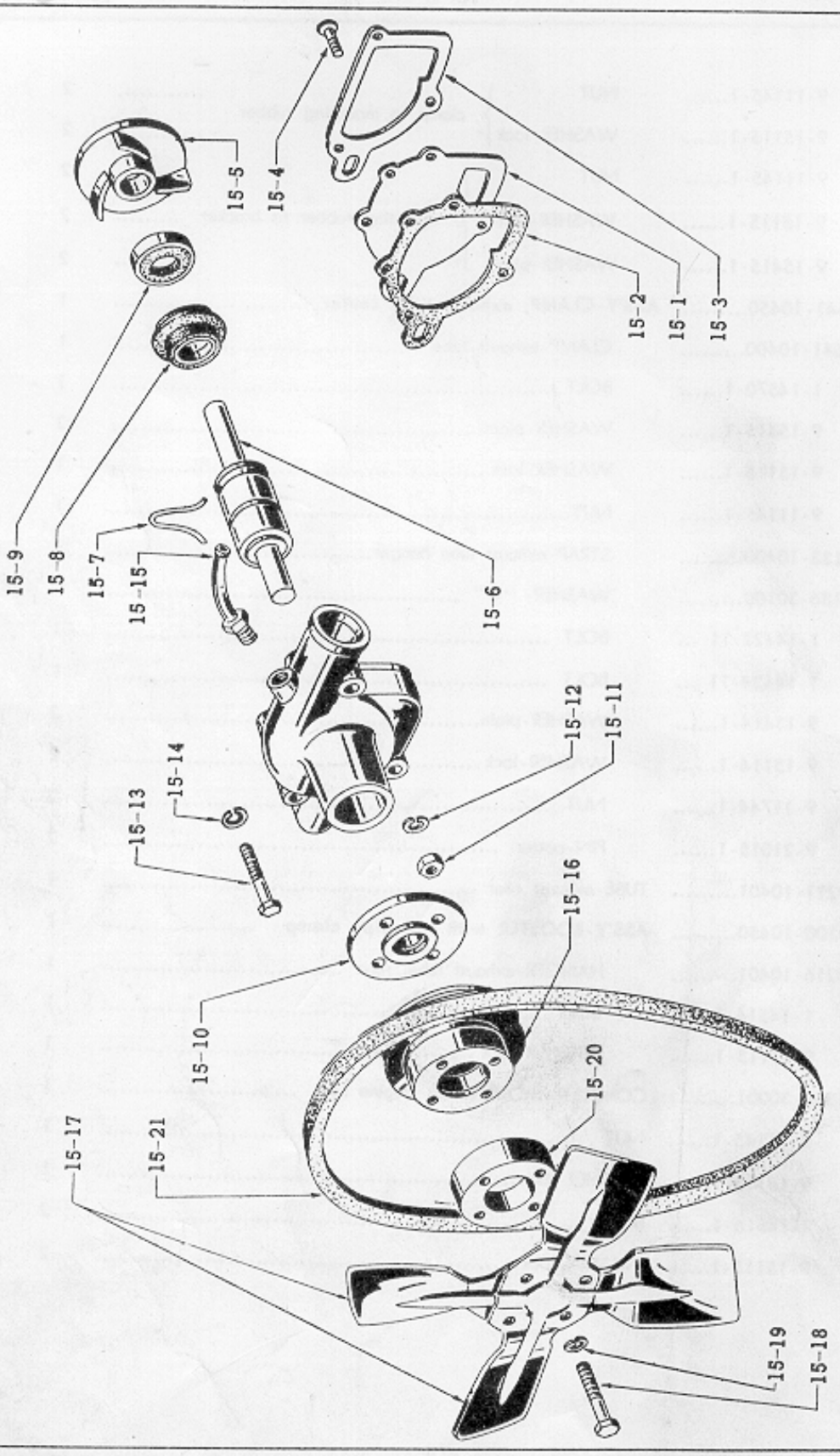

ILL. NO.	PART NO.	PART NAME	Q'TY PER SECTION SP310	Q'TY PER SECTION SPL310
		WATER PUMP & FAN		
	21010-38725	**ASS'Y-PUMP, water**	1	1
15-1	21013-32200	COVER-water pump	1	1
15-2	21014-32200	GASKET-water pump cover, body side	1	1
15-3	21074-32200	GASKET-water pump cover, block side	1	1
15-4	21012-01300	SCREW-machine, flat head	2	2
15-5	21022-32202	VANE-water pump	1	1
15-6	21035-32200	BEARING-water pump	1	1
15-7	21043-04000	WIRE-lock water bearing	1	1
15-8	21026-04000	SEAL-water pump	1	1
15-9	21027-04000	ASS'Y-SEAT, floating, water pump	1	1
15-10	21054-32200	HUB-water pump pulley	1	1
15-11	9-11146	NUT (to fix water pump)	1	1
15-12	9-15116	WASHER-lock (to fix water pump)	1	1
15-13	9-11560	BOLT (to fix water pump)	2	2
15-14	9-15115	WASHER-lock (to fix water pump)	2	2
15-15	9-31306-1	PLUG-taper thread head	1	1
15-16	21051-32200	PULLEY-fan & water pump	1	1
15-17	21060-32200	**ASS'Y-BLADE, fan**	1	1
	21061-32200	BLADE-fan, front	1	1
	21062-32200	BLADE-fan, rear	1	1
15-18	○ 21066-10400	SCREW-machine, fan	4	4
15-19	9-15214-1	WASHER-lock	4	4
15-20	○ 27401-10400	SPACER	1	1
15-21	21067-31301	BELT-fan	1	1

RADIATOR MOUNTING

Fig. 16

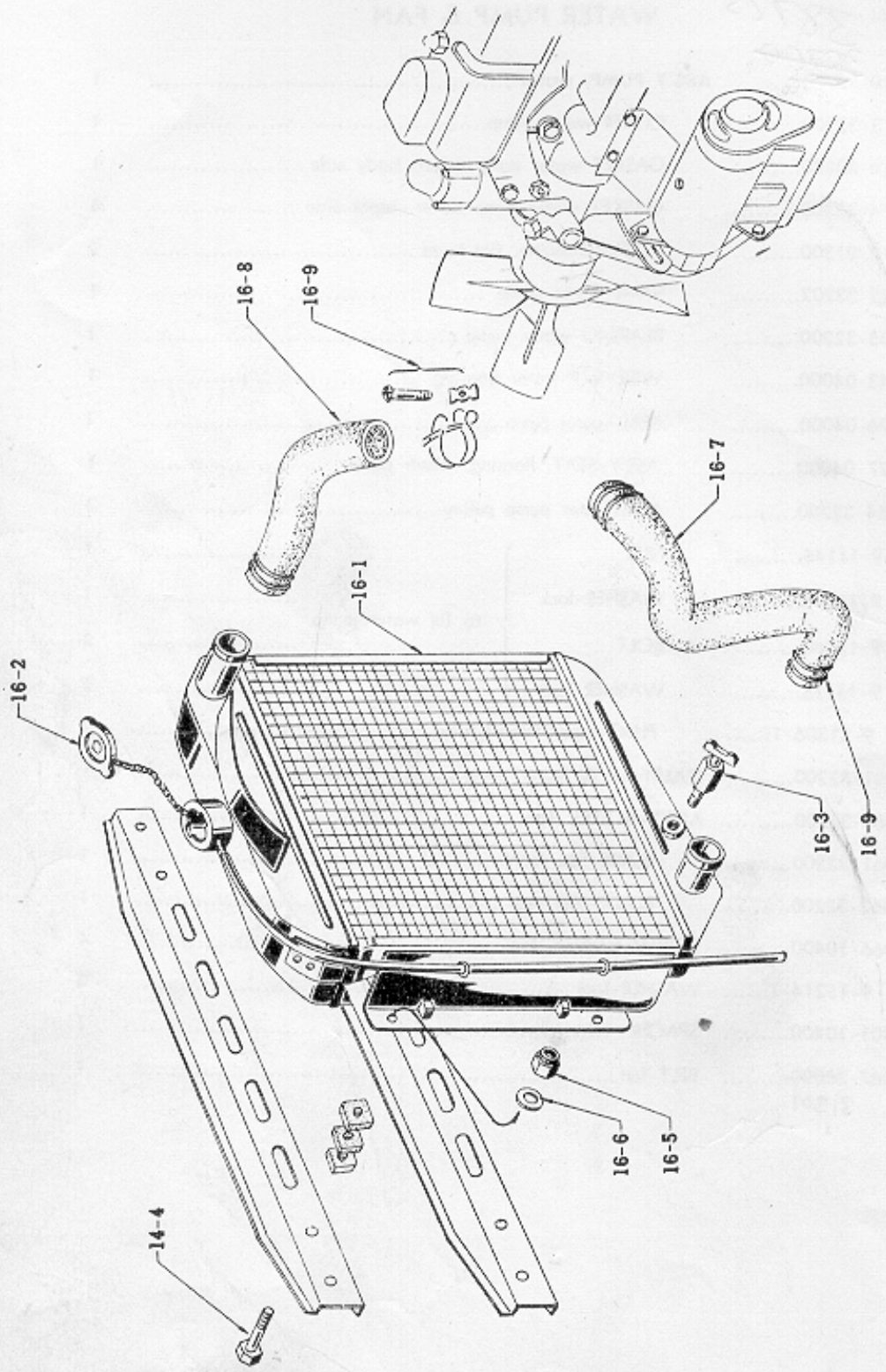

ILL. NO.	PART NO.	PART NAME	Q'TY PER SECTION SP310	Q'TY PER SECTION SPL310
		RADIATOR		
16-1	○ 21400-10400.....	**ASS'Y-RADIATOR**	1	1
16-2	21430-30001.....	ASS'Y-CAP, pressure	1	1
16-3	21211-00800.....	COCK-drain	1	1
16-4	1-14522-1.....	BOLT	4	4
16-5	9-12345-1.....	NUT.....	4	4
16-6	9-15415-1.....	WASHER-plain.....	4	4
16-7	○ 21503-10400.....	HOSE-radiator to water pump	1	-
	○ 21503-~~10500~~ 12301.....	HOSE-radiator to water pump	U-1	1
16-8	○ ~~21501-10400~~ 36705.....	HOSE-cylinder head to radiator.....	1	-
	○ 21501-~~10500~~.....	HOSE-cylinder head to radiator	U-1	1
16-9	21505-32200.....	CLAMP-hose	4	4

22100-10400 **DISTRIBUTOR** **Fig. 17**

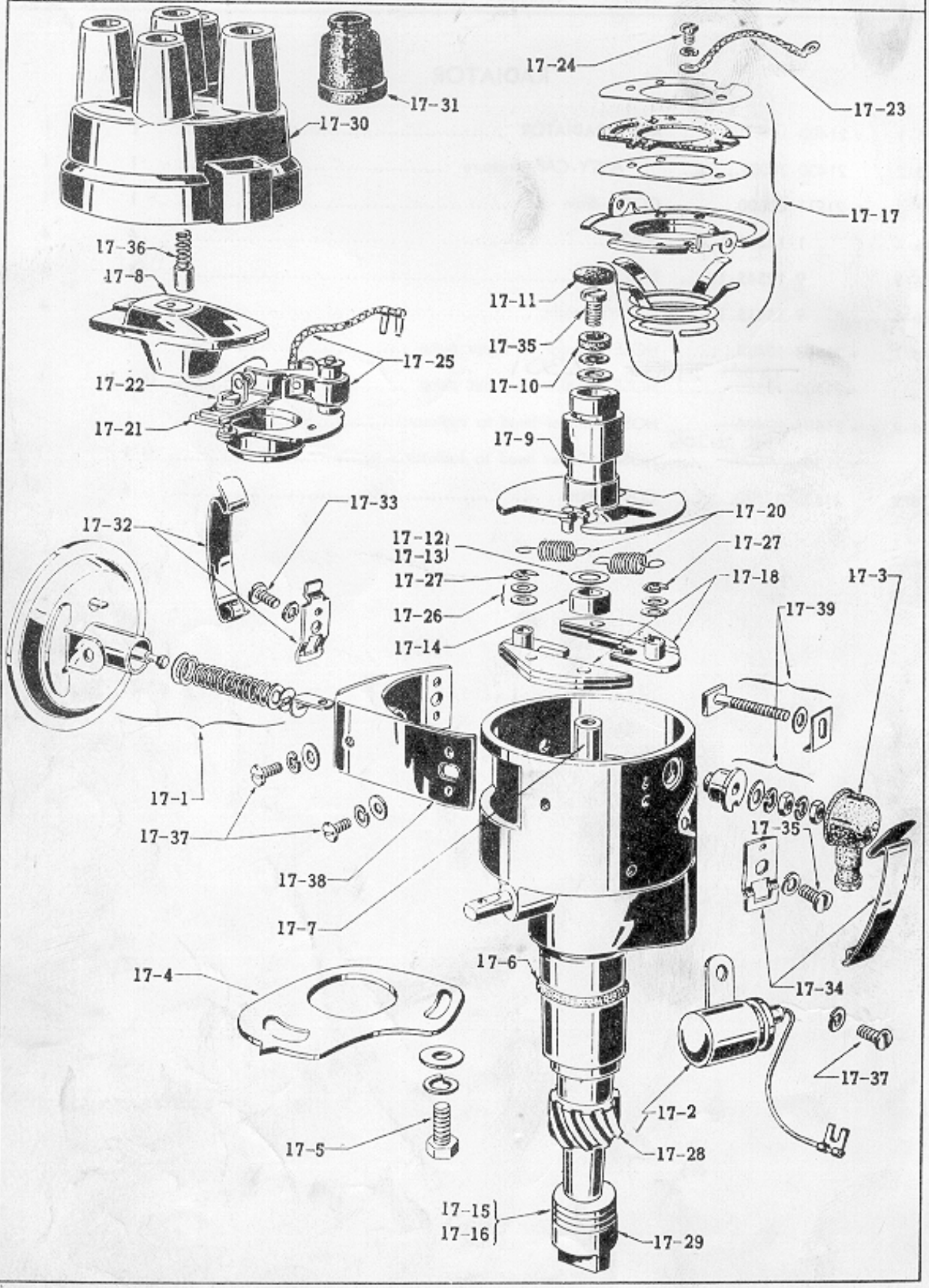

DISTRIBUTOR

ILL. NO.	PART NO.	PART NAME	Q'TY PER SECTION SP310	Q'TY PER SECTION SPL310
	○ 22100-10400	**ASS'Y-DISTRIBUTOR**	1	1
17-1	22301-32202	ASS'Y-CONTROL, vacuum	1	1
17-2	22102-00800	CONDENSER-distributor	1	1
17-3	22171-30100	CAP-gum	1	1
17-4	22180-32200	PLATE-fixing	1	1
17-5	22201-32200	BOLT-5φ	1	1
17-6	22131-32200	RING-"O"	1	1
17-7	○ 22108-10400	ASS'Y-SHAFT	1	1
17-8	22157-32200	ASS'Y-HEAD, rotor	1	1
17-9	22132-32200	ASS'Y-CAM, set	1	1
17-10	22116-50000	DISC-felt	1	1
17-11	22135-32200	PACKING	1	1
17-12	22117-32200	WASHER-thrust (0.5t)	1	1
17-13	22184-32200	WASHER-thrust (0.15t)	0-2	0-2
17-14	22134-32200	TUBE-insulating	1	1
17-15	22118-32200	WASHER-thrust (0.5t)	1	1
17-16	22118-43800	WASHER-thrust (0.8t)	1	1
17-17	22136-32200	ASS'Y-BRAKER, contact	1	1
17-18	22123-32200	ASS'Y-WEIGHT, governer	2	2
17-20	22127-32200	ASS'Y-SPRING, governer	1	1
17-21	22143-32200	POINT-contact 22145-12200	1	1
17-22	22149-32200	SCREW-4φ	1	1
17-23	22182-32201	ASS'Y-WIRE, earth	1	1
17-24	22181-32200	SCREW-3φ	2	2
17-25	22146-32200	ASS'Y-ARM, contact	1	1
17-26	22148-32200	WASHER-thruft (0.1t)	3-5	3-5
17-27	22147-32200	STOPPER	3	3
17-28	○ 22948-10400	ASS'Y-PINION	1	1
17-29	○ 22119-10400	ASS'Y-COUPLING	1	1
17-30	22162-32201	ASS'Y-CAP, distributor	1	1
17-31	22171-00800	CAP-gum	5	5

ILL. NO.	PART NO.	PART NAME	Q'TY PER SECTION SP310	Q'TY PER SECTION SPL310
17-32	22167-32200.....	ASS'Y-CLAMP, cap (1)	1	1
17-33	22103-50000.....	SCREW-4ϕ	1	1
17-34	22168-32200.....	ASS'Y-CLAMP, cap (2)	1	1
17-35	22139-85060.....	SCREW-4ϕ	2	2
17-36	22165-30101.....	ASS'Y-POINT, carbon.....	1	1
17-37	23132-85060.....	SCREW 4ϕ.....	3	3
17-38	22209-32200.....	CASE-set, vacuum control	1	1
17-39	22403-32200.....	ASS'Y-TERMINAL.....	1	1

23100-32200 GENERATOR (HITACHI) Fig. 18

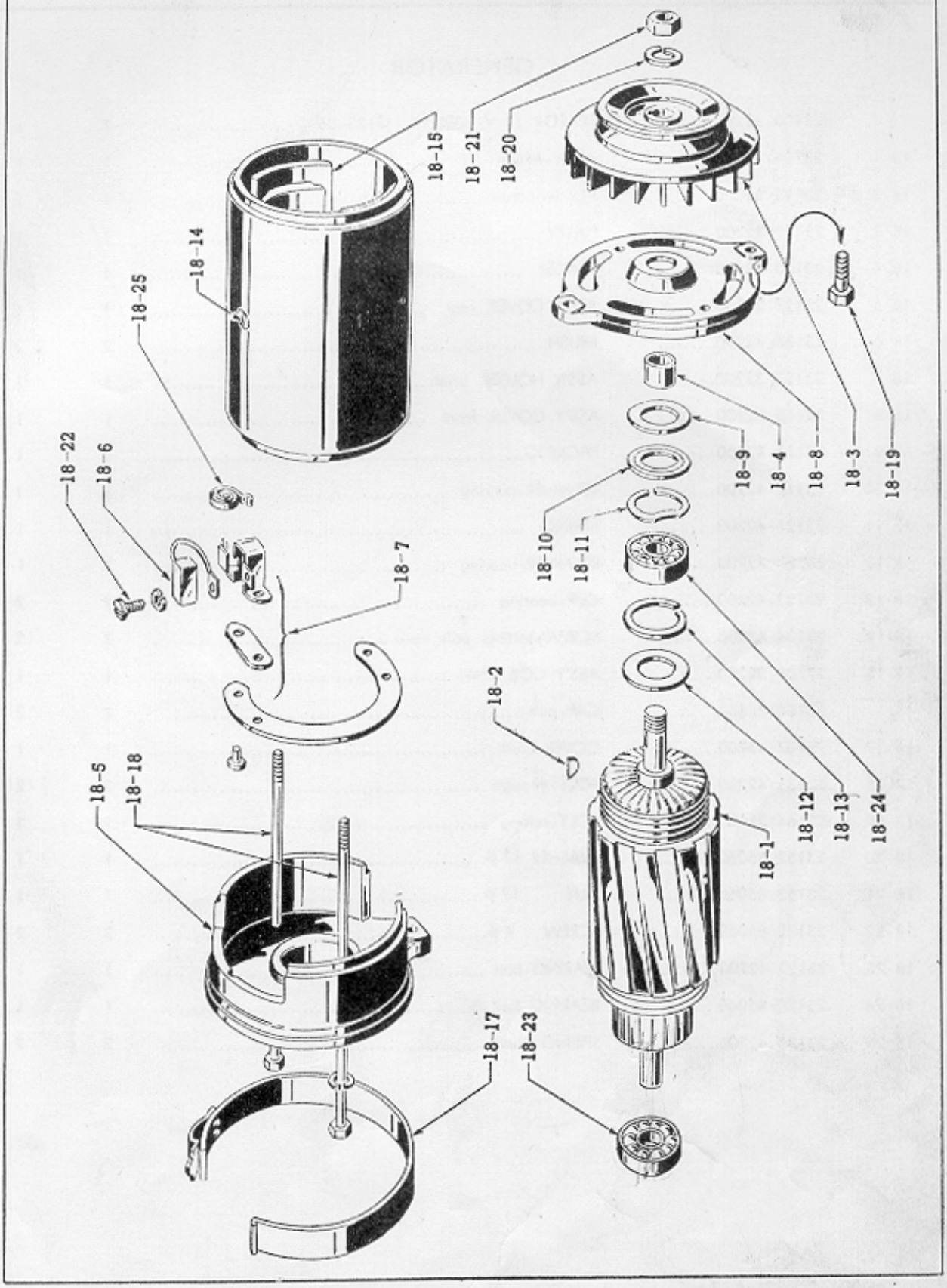

GENERATOR

ILL. NO.	PART NO.	PART NAME	Q'TY PER SECTION SP310	Q'TY PER SECTION SPL310
	23100-32200.....	**GENERATOR** 12 V 300 W (G123-06)	1	1
18-1	23108-42200.....	ASS'Y-ARMATURE	1	1
18-2	23195-30000.....	KEY-woodruff	1	1
18-3	23151-32200.....	PULLEY	1	1
18-4	23110-42200.....	SPACER	1	1
18-5	23127-32200.....	ASS'Y-COVER, rear	1	1
18-6	23135-42200.....	BRUSH	2	2
18-7	23133-32200.....	ASS'Y-HOLDER, brush	1	1
18-8	23118-32200.....	ASS'Y-COVER, front	1	1
18-9	23116-42200.....	PACKING.....	1	1
18-10	23117-42200.....	RETAINER-packing	1	1
18-11	23121-42200.....	SPRING	1	1
18-12	23122-42200.....	RETAINER-bearing	1	1
18-13	23123-42200.....	CLIP-bearing	2	2
18-14	23104-42200.....	SCREW-setting, pole core	2	2
18-15	23105-32200.....	ASS'Y-COIL, field	1	1
	23159-25660.....	CAP-gum.....	2	2
18-17	23107-42200.....	COVER-brush	1	1
18-18	23131-42200.....	BOLT-through	2	2
18-19	23164-31301.....	BOLT-setting	1	1
18-20	23152-85060.....	WASHER 17 ϕ.....	1	1
18-21	23153-85060.....	NUT 17 ϕ.....	1	1
18-22	23132-85060.....	SCREW 4 ϕ.....	3	3
18-23	23120-42200.....	BEARING-ball	1	1
18-24	23120-85060.....	BEARING-ball	1	1
18-25	23138-42200.....	SPRING-brush	2	2

32200

23300-~~30100~~ STARTER MOTOR (HITACHI) Fig. 20

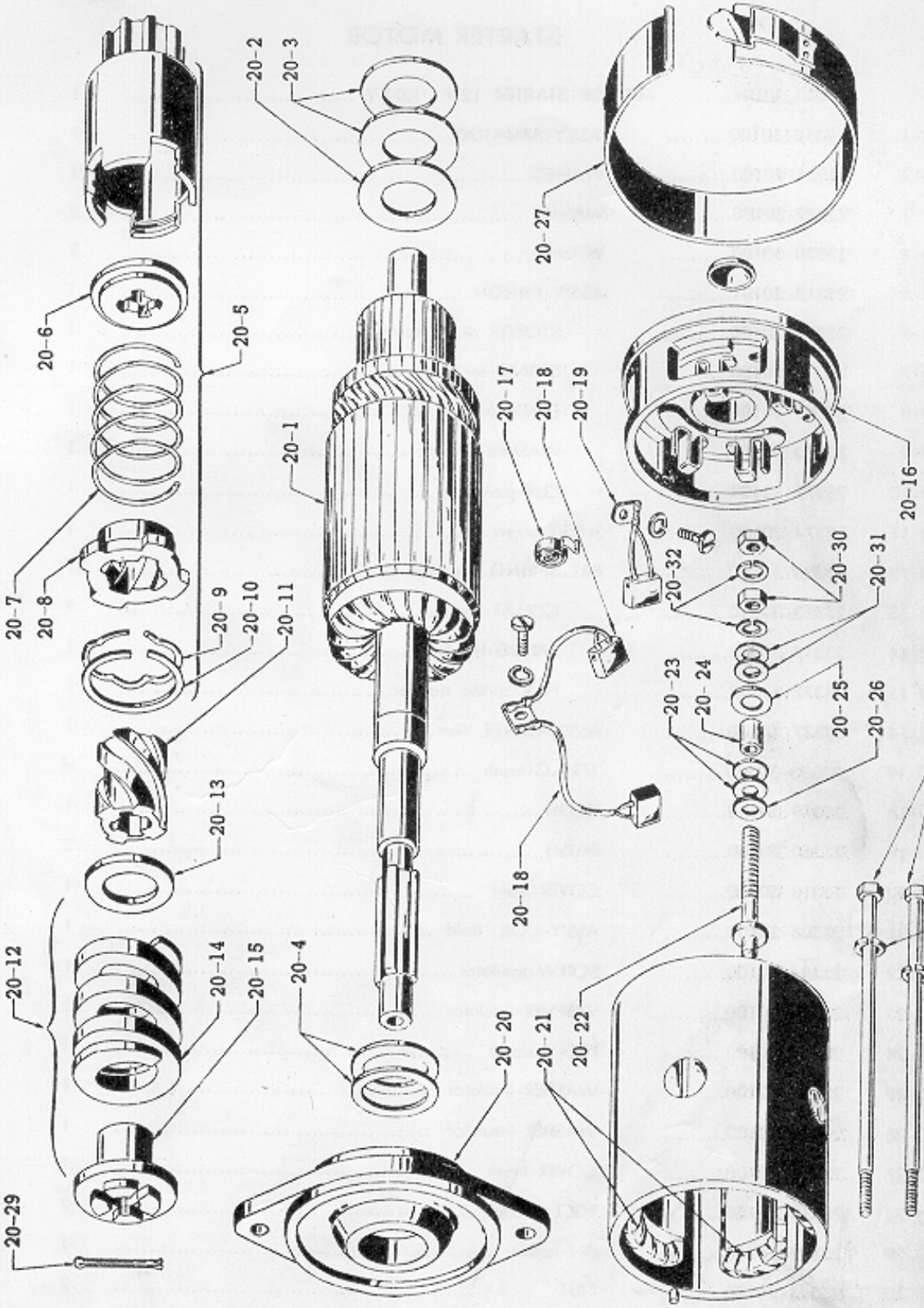

ILL. NO.	PART NO.	PART NAME	Q'TY PER SECTION SP310	Q'TY PER SECTION SPL310

STARTER MOTOR

32200

	23300-30100	**MOTOR-STARTER 12 V 1.0 KW**	1	1
20-1	23310-30100	ASS'Y-ARMATURE	1	1
20-2	23339-30100	WASHER	1	1
20-3	23382-30100	WASHER	2	2
20-4	23320-30100	WASHER	2	2
20-5	23312-30101	**ASS'Y-PINION**	1	1
20-6	23314-30100	STOPPER-return spring	1	1
20-7	23315-30100	SPRING-return	1	1
20-8	23369-30100	GUIDE-pinion	1	1
20-9	23370-30100	WASHER-pinion	1	1
20-10	23372-30100	CLIP-pinion	1	1
20-11	23374-30100	SLEEVE-screw	1	1
20-12	23426-31300	**SET-SPRING, bendex**	(1)	(1)
20-13	23375-31300	COLLAR-spring	1	1
20-14	23317-31300	SPRING-bendex	1	1
20-15	23377-31300	NUT-spring stopper	1	1
20-16	23337-30100	ASS'Y-COVER, rear	1	1
20-17	23333-30100	SPRING-brush	4	4
20-18	23379-30100	BRUSH	1	1
20-19	23380-30100	BRUSH	2	2
20-20	23318-30100	COVER-front	1	1
20-21	23306-30100	ASS'Y-COIL, field	1	1
20-22	23384-30100	SCREW-insulator	1	1
20-23	23385-30100	WASHER-insulator	2	2
20-24	23386-30100	PIPE-insulator	1	1
20-25	23387-30100	WASHER-insulator	1	1
20-26	23388-30100	WASHER-insulator	1	1
20-27	23342-30100	COVER-brush	1	1
20-28	23340-30100	BOLT-through	2	2
20-29	23392-26760	PIN-cotter	1	1
20-30	23393-30100	NUT 6 ϕ	2	2
20-31	23394-30100	WASHER 6 ϕ	2	2

ILL. NO.	PART NO.	PART NAME	Q'TY PER SECTION SP310	Q'TY PER SECTION SPL310
20-32	22203-50000.....	WASHER-lock	4	4
	1-24635-1.....	BOLT } to fix starter motor	2	2
	9-15216-1.....	WASHER-lock }	2	2

ELECTRIC PARTS

Fig. 21

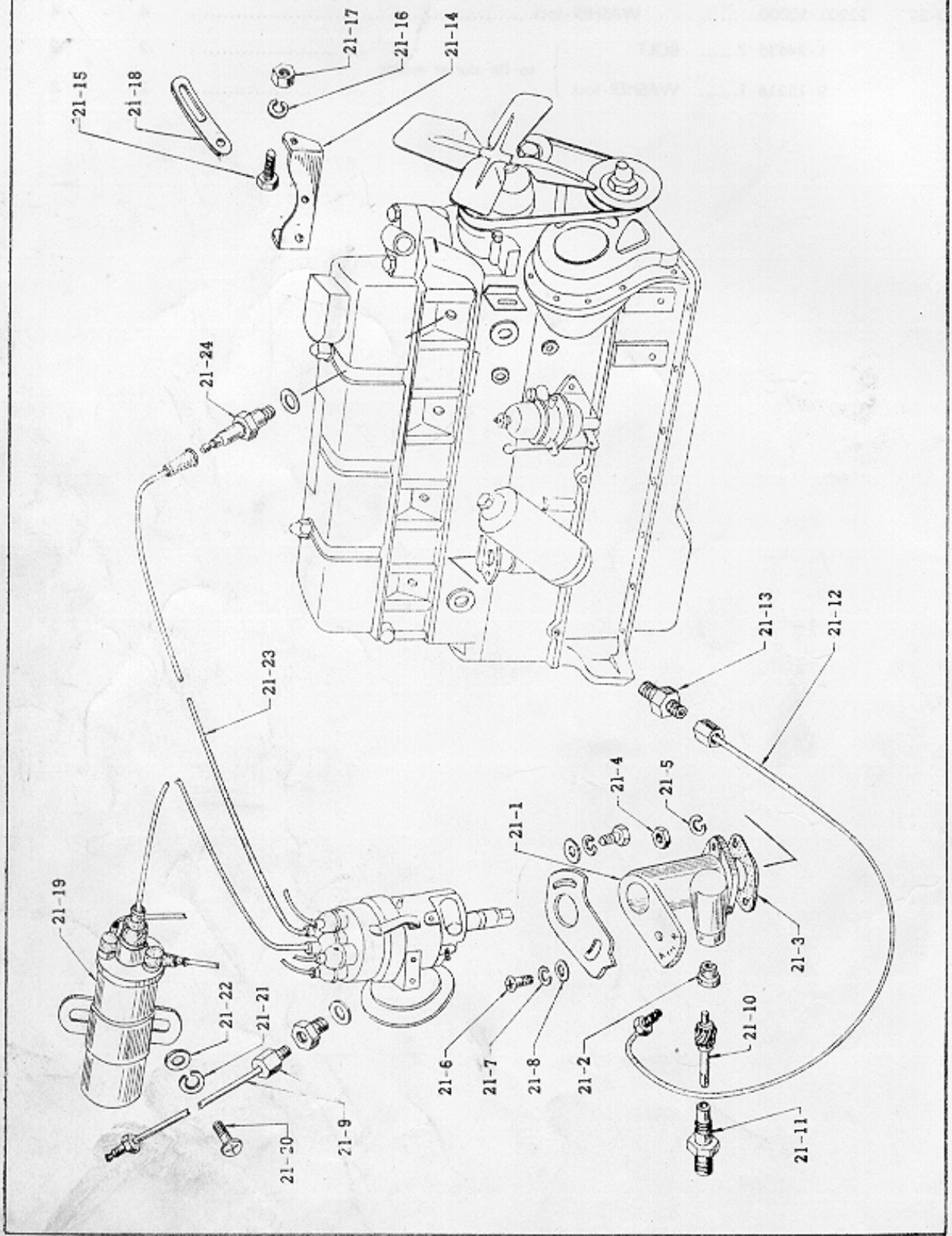

ILL. NO.	PART NO.	PART NAME	Q'TY PER SECTION SP310	Q'TY PER SECTION SPL310

DISTRIBUTOR & GENERATOR MOUNTING

21-1	22178-10400	SUPPORT-distributor	1	1
21-2	32706-26760	BUSH-speedometer drive pinion	1	1
21-3	22179-32200	PACKING-support, distributor	1	1
21-4	9-11244-1	NUT	2	2
21-5	9-15114-1	WASHER-lock	2	2
21-6	3-67412-1	SCREW	1	1
21-7	9-15114-1	WASHER-lock	1	1
21-8	9-15414-1	WASHER-plain	1	1
21-9	22318-10400	ASS'Y-TUBE, conduit, vacuum control	1	1
21-10	22951-10400	PINION-drive, tachometer	1	1
21-11	32707-32200	ASS'Y-SLEEVE, speedometer pinion	1	1
	32709-04100	RING-"O" speedometer pinion	1	1
	22717-04100	RETAINER-"O" ring	1	1
	32710-04100	RING-"O" sleeve	1	1
21-12	22952-10400	ASS'Y-TUBE, oil feed tachometer drive	1	1
21-13	22954-10400	CONNECTION-oil feed tube	1	1
21-14	23168-32200	BRACKET-mounting generator	1	1
21-15	00 1-34525-1	BOLT (generator to bracket)	2	2
21-16	9-15215-1	WASHER-lock (generator to bracket)	2	2
21-17	9-11245-1	NUT (generator to bracket)	2	2
	9-15515-1	WASHER-plain (generator to bar)	1	1
21-18	23174-32200	BAR-adjusting, generator	1	1

IGNTION COIL & HIGH TENSION CABLE

21-19	22433-09400	COIL-ignition (HITACHI)	1	1
	22433-31304	COIL-ignition (NANSHIN)		
21-20	3-14414-1	SCREW (coil to dash)	2	2
21-21	9-15114-1	WASHER-lock (coil to dash)	2	2
21-22	9-15414-1	WASHER-plain (coil to dash)	2	2
21-23	22410-32200	ASS'Y-CABLE, high tension (No. 1)	1	1

ILL. NO.	PART NO.	PART NAME	Q'TY PER SECTION SP310	Q'TY PER SECTION SPL310
	22412-32200.....	ASS'Y-CABLE, high tension (No. 2)	1	1
	22414-32000.....	ASS'Y-CABLE, high tension (No. 3)	1	1
	22416-32200.....	ASS'Y-CABLE, high tension (No. 4)	1	1
	22450-10400.....	ASS'Y CABLE, high tension (coil to distributor).....	1	1
21-24	22401-58000.....	PLUG-spark (N.G.K.)		
	22401-58001.....	PLUG-spark (N.G.K. hot type)	4	4
	22401-32200.....	PLUG-spark (HITACHI)		
	23500-~~42200~~ 61000.....	REGULATOR-voltage 12V-300W	1	1
	3-14420-1.....	SCREW.....	2	2
	9-15114-1.....	WASHER-lock	2	2

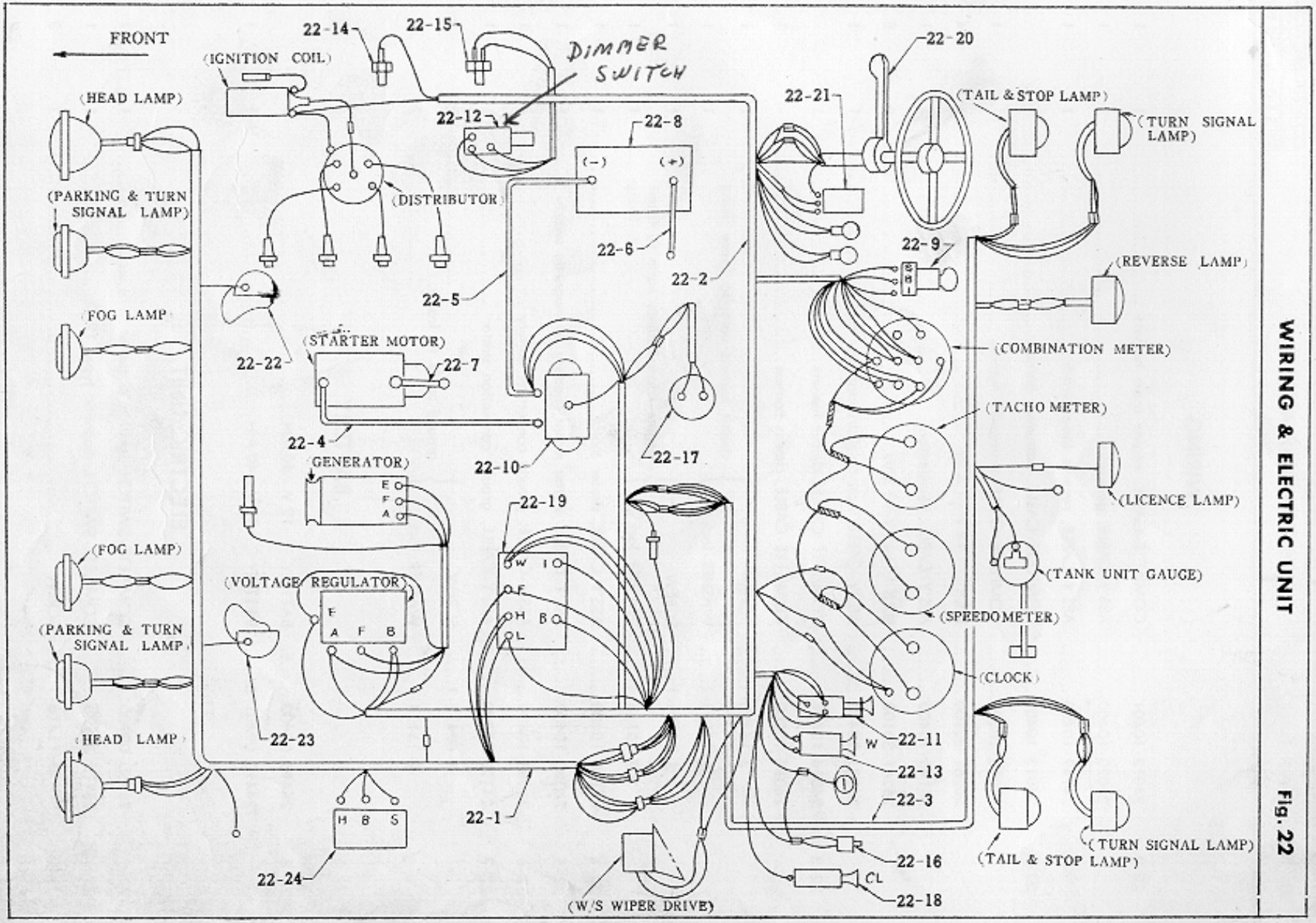

WIRING & ELECTRIC UNIT

Fig. 22

ILL. NO.	PART NO.	PART NAME	Q'TY PER SECTION SP310	SPL310

WIRING

22-1	○ 24012-10401.....	COMPLETE-CABLE, engine room harness	1	1
	24020-10400.....	ASS'Y-CABLE, generator	1	1
	24149-10400.....	ASS'Y-CABLE, reverse lamp switch	1	1
22-2	○ 24013-10401.....	COMPLETE-CABLE, instrument harness	1	-
	○ 24013-10500.....	COMPLETE-CABLE, instrument harness	-	1
	26261-30100.....	BULB 12 V—1.5 W	4	4
	○ 24140-10400.....	ASS'Y-CABLE, illumination	1	1
	26261-30100.....	BULB 12 V—1.5 W	8	8
	○ 24021-10400.....	ASS'Y-CABLE, coil to distributor low tension	1	1
22-3	○ 24014-10401.....	COMPLETE-CABLE, chassis harness	1	-
	○ 24014-10500.....	COMPLETE-CABLE, chassis harness	-	1
	3-14410-1.....	SCREW } chassis harness earth to frame fixing ...	1	1
	9-15114-1.....	WASHER-lock } ...	1	1
	3-14410-1.....	SCREW } engine room harness earth to frame fixing ...	1	1
	9-15114-1.....	WASHER-lock } ...	1	1
22-4	○ 24110-10400.....	ASS'Y-CABLE, starter motor	1	1
22-5	○ 24090-10400.....	ASS'Y-CABLE, starter motor (battery to magnetic switch)	1	1
22-6	○ 24080-10400.....	ASS'Y-CABLE, ground connection battery	1	1
22-7	24120-32200.....	ASS'Y-CABLE, ground connection starter	1	1
	3-69412-1.....	SCREW } ground cable to frame	2	2
	9-15114-1.....	WASHER-lock }	2	2

BATTERY

22-8	24410-09400.....	BATTERY 12 V— 40 A.H	1	-
	24410-09401/6.....	BATTERY 12 V— 40 A.H	U-1	1

ELECTRIC UNIT

22-9	25150-09900.....	COMPLETE-SWITCH, ignition & starter	1	1
22-10	25117-30100.....	COMPLETE-SWITCH, magnetic type 12 V	1	1
	3-11416-1.....	SCREW	2	2

ILL. NO.	PART NO.	PART NAME	Q'TY PER SECTION SP310	SPL310
	9-15114-1.....	WASHER-lock	2	2
	9-15414-1.....	WASHER-plain	2	2
22-11	○ 25160-10401.....	COMPLETE-SWITCH, lighting	1	1
22-12	25210-04100.....	COMPLETE-SWITCH, dimmer	1	-
	25210-43700.....	COMPLETE-SWITCH, dimmer	-	1
22-13	○ 25260-10400.....	COMPLETE-SWITCH, w/s wiper motor	1	1
22-14	25240-02700.....	COMPLETE-SWITCH, oil pressure	1	1
22-15	25320-02700.....	COMPLETE-SWITCH, stop lamp	1	1
22-16	○ 25270-10400.....	COMPLETE-SWITCH, dash lamp	1	1
22-17	○ 25310-10400.....	COMPLETE-SWITCH, reverse lamp	1	1
22-18	○ 25330-10400.....	COMPLETE-LIGHTER, cigarettes	1	1
22-19	25410-04400.....	ASS'Y-BLOCK, fuse	1	-
	25410-04200.....	ASS'Y-BLOCK, fuse	U-1	1
	25462-50000.....	FUSE 20 A	2	2
	25467-30800.....	FUSE 8 A	2	2
	3-14022-1.....	SCREW	2	2
	9-15110-1.....	WASHER-lock } fuse block to dash upper	2	2
	9-25410-1.....	WASHER-plain	2	2
22-20	25510-04402.....	COMPLETE-SWITCH, turn signal	1	1
22-21	25520-04101.....	ASS'Y-UNIT, flasher	1	1
	3-14010-1.....	SCREW	1	1
	9-15110-1.....	WASHER-lock	1	1
22-22	26310-32200.....	ASS'Y-HORN, electric 12 V "high"	1	1
22-23	25330-32200.....	ASS'Y-HORN, electric 12 V "low"	1	1
	1-21522-1.....	BOLT	4	4
	9-15115-1.....	WASHER-lock	4	4
22-24	26320-58000.....	ASS'Y-RELAY, horn 12 V	1	1
	5-11213-1.....	SCREW-tapping	2	2

METER

Fig. 23

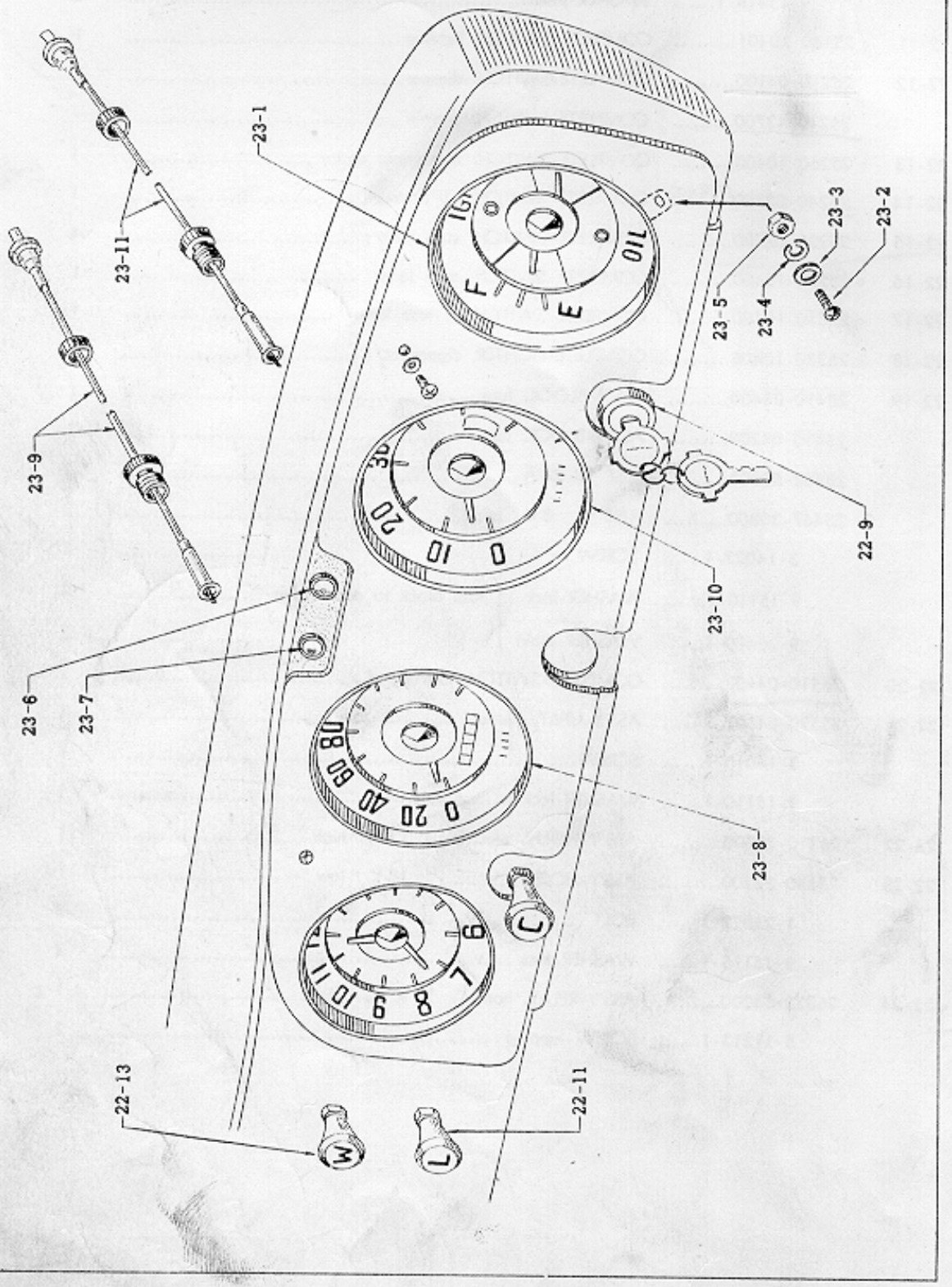
23-1
23-11
23-9
23-6
23-7
23-5
23-4
23-3
23-2
22-9
23-10
23-8
22-13
22-11
F
E
C
W
L

ILL. NO.	PART NO.	PART NAME	Q'TY PER SECTION SP310	Q'TY PER SECTION SPL310
	9-15114-1.....	WASHER-lock	2	2
	9-15414-1.....	WASHER-plain	2	2
22-11	○ 25160-10401.....	COMPLETE-SWITCH, lighting	1	1
22-12	25210-04100.....	COMPLETE-SWITCH, dimmer	1	-
	25210-43700.....	COMPLETE-SWITCH, dimmer	-	1
22-13	○ 25260-10400.....	COMPLETE-SWITCH, w/s wiper motor	1	1
22-14	25240-02700.....	COMPLETE-SWITCH, oil pressure	1	1
22-15	25320-02700.....	COMPLETE-SWITCH, stop lamp	1	1
22-16	○ 25270-10400.....	COMPLETE-SWITCH, dash lamp	1	1
22-17	○ 25310-10400.....	COMPLETE-SWITCH, reverse lamp	1	1
22-18	○ 25330-10400.....	COMPLETE-LIGHTER, cigarettes	1	1
22-19	25410-04400.....	ASS'Y-BLOCK, fuse	1	-
	25410-04200.....	ASS'Y-BLOCK, fuse	U-1	1
	25462-50000.....	FUSE 20 A	2	2
	25467-30800.....	FUSE 8 A	2	2
	3-14022-1.....	SCREW	2	2
	9-15110-1.....	WASHER-lock } fuse block to dash upper	2	2
	9-25410-1.....	WASHER-plain	2	2
22-20	25510-04402.....	COMPLETE-SWITCH, turn signal	1	1
22-21	25520-04101.....	ASS'Y-UNIT, flasher	1	1
	3-14010-1.....	SCREW	1	1
	9-15110-1.....	WASHER-lock	1	1
22-22	26310-32200.....	ASS'Y-HORN, electric 12 V "high"	1	1
22-23	25330-32200.....	ASS'Y-HORN, electric 12 V "low"	1	1
	1-21522-1.....	BOLT	4	4
	9-15115-1.....	WASHER-lock	4	4
22-24	26320-58000.....	ASS'Y-RELAY, horn 12 V	1	1
	5-11213-1.....	SCREW-tapping	2	2

METER

Fig. 23

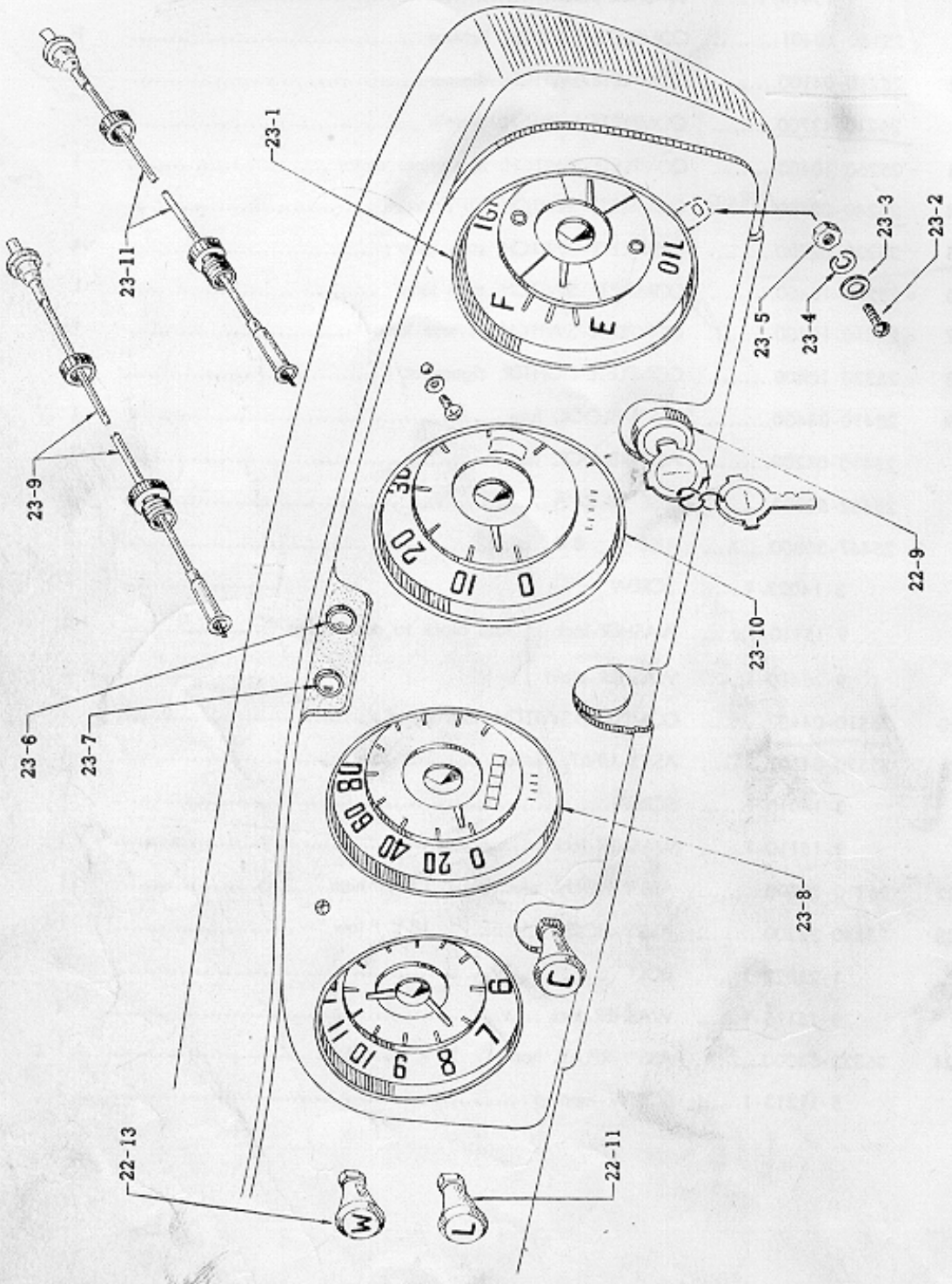
23-1
23-11
23-9
23-6
23-7
23-5
23-4
23-3
23-2
22-9
23-10
23-8
22-13
22-11
F
E
C
W
L

ILL. NO.	PART NO.	PART NAME	Q'TY PER SECTION SP310	SPL310

METER

23-1	○ 25020-10400.....	ASS'Y-COMBINED, instrument.....	1	-
	○ 25020-10500.....	ASS'Y-COMBINED, instrument.....	-	1
23-2	3-14012-1.....	SCREW	2	2
23-3	9-15410-1.....	WASHER-plain.....	2	2
23-4	9-15110-1.....	WASHER-lock	2	2
23-5	9-11140-1.....	NUT	2	2
	25250-30100.....	COMPLETE-THERMAL TRANSMITTER	1	1
	25251-30100.....	NUT-ground, thermal transmitter	1	1
23-6	26461-08600.....	ASS'Y-LAMP, warning turn signal (green)	1	1
23-7	26451-08600.....	ASS'Y-LAMP, warning main beam (red).....	1	1
23-8	○ 25050-10400.....	ASS'Y-SPEEDOMETER (km)	1	-
	○ 25050-10401.....	ASS'Y-SPEEDOMETER (mile)	U-1	-
	○ 25050-10500.....	ASS'Y-SPEEDOMETER (km)	-	1
	○ 25050-10501.....	ASS'Y-SPEEDOMETER (mile)	-	1
	3-14012-1.....	SCREW	2	2
	9-15410-1.....	WASHER-plain	2	2
	9-15110-1.....	WASHER-lock	2	2
	9-11140-1.....	NUT.....	2	2
23-9	25055-04101.....	ASS'Y-SHAFT, flexible, speedometer	1	-
	25055-08300.....	ASS'Y-SHAFT, flexible, speedometer	-	1
23-10	○ 25052-10401.....	ASS'Y-TACHOMETER	1	-
	○ 25052-10501.....	ASS'Y-TACHOMETER	-	1
	3-14012-1.....	SCREW-machine	2	2
	9-15410-1.....	WASHER-plain.....	2	2
	9-15110-1.....	WASHER-lock	2	2
	9-11140-1.....	NUT.....	2	2
23-11	○ 25057-10400.....	ASS'Y-SHAFT, flexible, tachometer.....	1	-
	○ 25057-10500.....	ASS'Y-SHAFT, flexible, tachometer	-	1

W/S WIPER

Fig.24

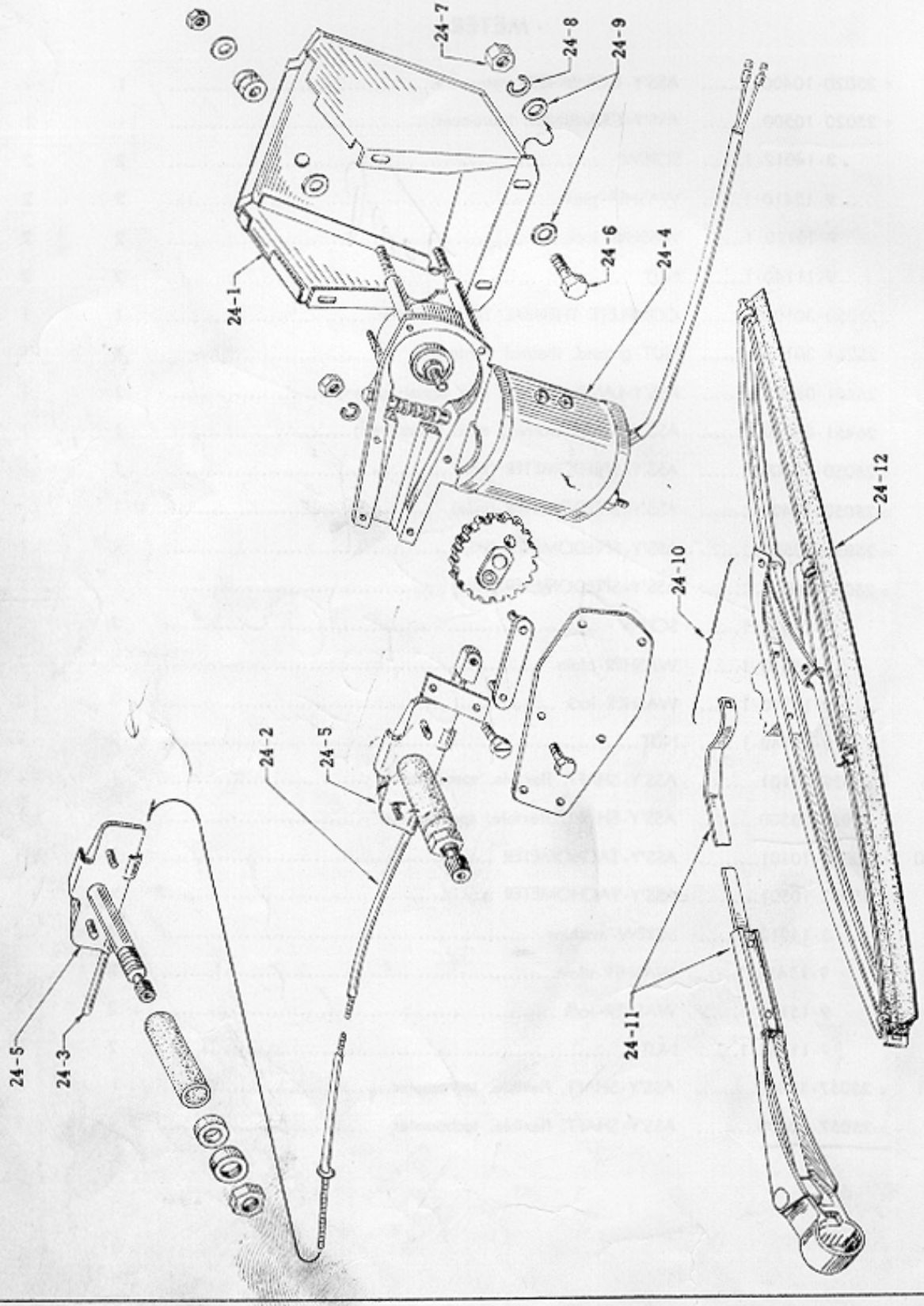

ILL. NO.	PART NO.	PART NAME	Q'TY PER SECTION SP310	Q'TY PER SECTION SPL310

W/S WIPER

	○ 26340-10400.....	**ASS'Y-WIPER DRIVE, w/s**		1	1
24-1	○ 26345-10400.....	ASS'Y-FRAME, wiper drive		1	1
24-2	○ 26347-10400.....	CASING-flexible wire		1	1
24-3	26348-30001.....	CASING-OUTER, wind screen		1	1
24-4	○ 26355-10400.....	ASS'Y-MOTOR, w/s wiper drive		1	1
24-5	○ 26371-10400.....	ASS'Y-BOX, wheel, w/s wiper		2	2
24-6	1-14414-1.....	BOLT	wiper to cowl	4	4
24-7	9-11144-1.....	NUT	wiper to cowl	2	2
24-8	9-15114-1.....	WASHER-lock	wiper to cowl	4	4
24-9	9-15414-1.....	WASHER-plain	wiper to cowl	6	6
24-10	○ 26360-10400.....	**ASS'Y-ARM, w/s wiper with blade R.H.**		1	1
24-11	○ 26361-10400.....	ASS'Y-ARM, w/s wiper R.H.		1	1
24-12	○ 26362-~~10400~~ 32202	ASS'Y-BRADE, w/s wiper		1	1
	○ 26365-10400.....	**ASS'Y-ARM, w/s wiper with blade L.H.**		1	1
	○ 26366-10400.....	ASS'Y-ARM, w/s wiper L.H.		1	1
	○ 26362-10400.....	ASS'Y-BLADE, w/s wiper		1	1
	○ 27400-10400.....	**KIT-W/S WASHER**		1	-
	○ 27400-10401.....	**KIT-W/S WASHER**		U-1	-
	○ 27400-10500.....	**KIT-W/S WASHER**		-	1

26010-10400	HEAD LAMP	Fig. 25

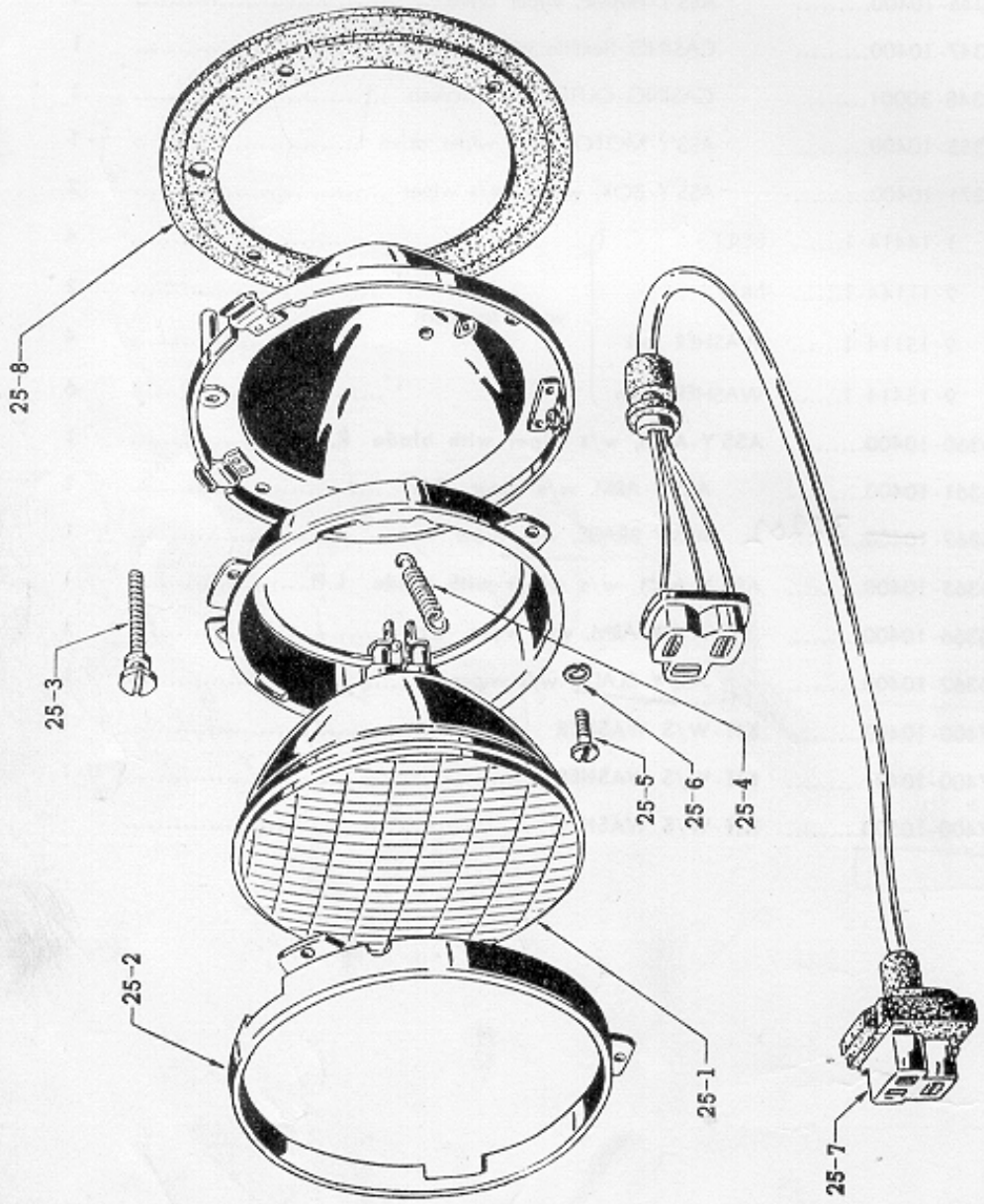

ILL. NO.	PART NO.	PART NAME	Q'TY PER SECTION SP310	Q'TY PER SECTION SPL310
	○ 26010-10400.....	**ASS'Y-LAMP, head**	2	-
	○ 26010-10500.....	**ASS'Y-LAMP, head**	-	2
25-1	26705-04100.....	UNIT-sealed beam, head	2	-
	26705-04200.....	UNIT-sealed beam, head	-	2
25-2	26017-04100.....	RING-retaining lens.....	2	2
25-3	26022-01301.....	SCREW-adjusting.....	4	4
25-4	26024-01301.....	SPRING-tension	2	2
25-5	26022-04100.....	SCREW-fixing	8	8
25-6	9-15110-1.....	WASHER-lock	8	8
25-7	26031-04100.....	ASS'Y-CABLE with connector	2	2
25-8	26027-04100.....	SHEET-head lamp.....	2	2

HEAD LAMP

LAMP (1) Fig. 26

Lamp-room & map

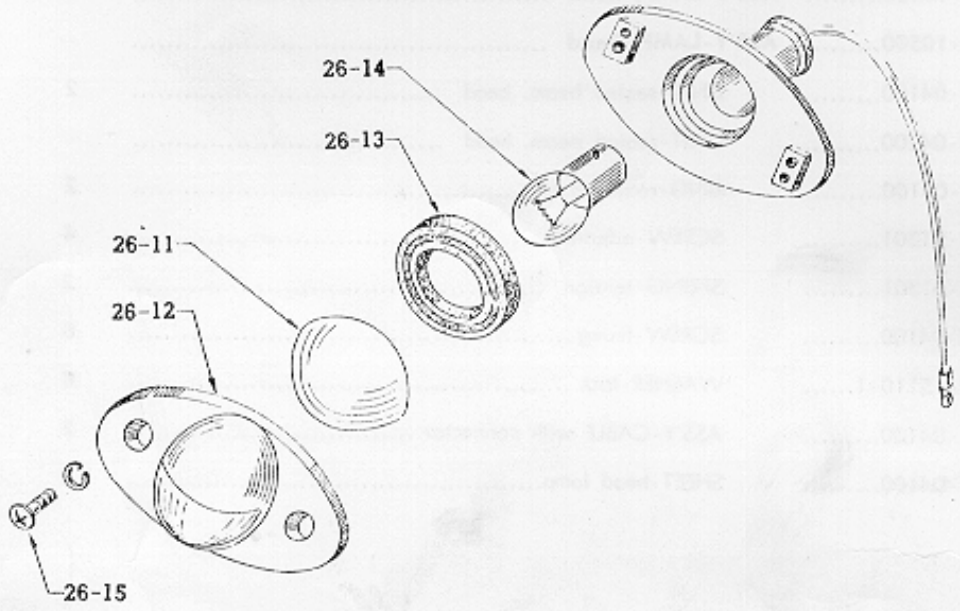

Lamp-parking & turn signal

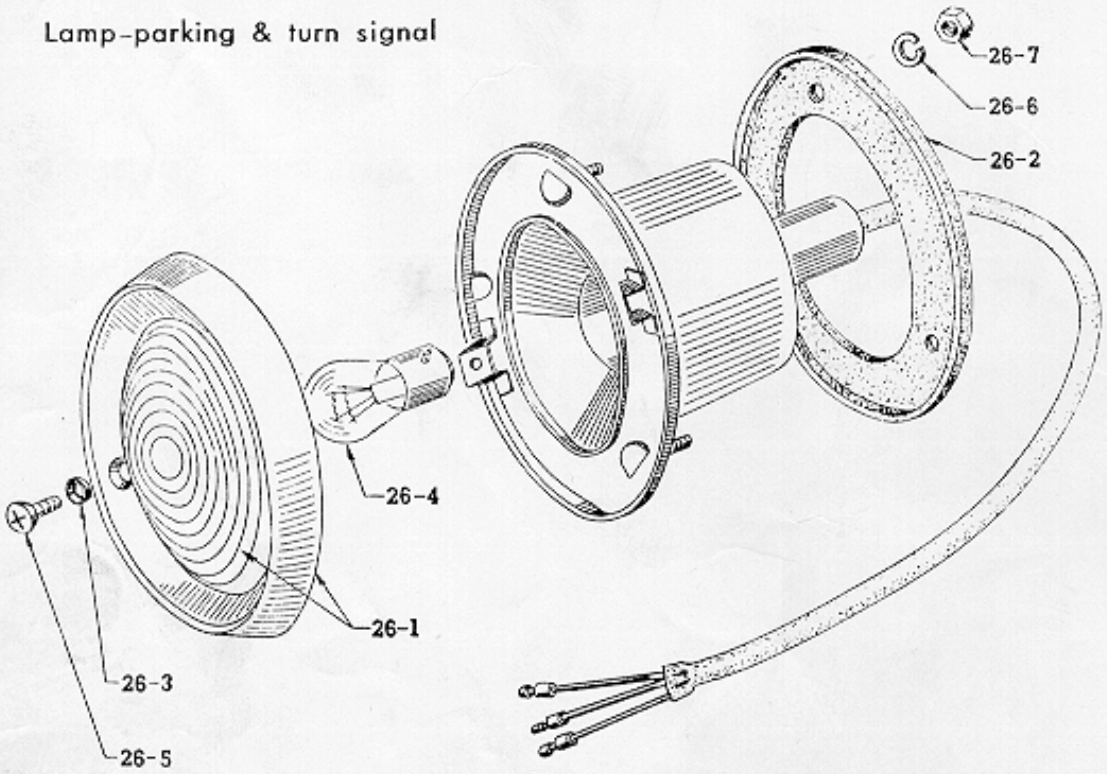

ILL. NO.	PART NO.	PART NAME	Q'TY PER SECTION SP310	Q'TY PER SECTION SPL310
	◦ 26120-10400.....	**ASS'Y-LAMP, parking & turn signal**	2	2
26-1	◦ 26121-10400.....	ASS'Y-LENS, parking & turn signal lamp	2	2
26-2	◦ 26123-10400.....	SEAT-gum	2	2
26-3	26127-04100.....	PACKING-washer 4 ϕ	2	2
26-4	26715-04200.....	BULB 12 V-25/8 W	2	2
26-5	9-98812-1.....	SCREW	2	2
26-6	9-15110-1.....	WASHER-lock	6	6
26-7	9-11110-1.....	NUT	6	6
	◦ 26410-10400.....	**ASS'Y-LAMP, room & map**	1	1
26-11	26511-04200.....	LENS-licence lamp	1	1
26-12	26512-04200.....	RIM-licence lamp	1	1
26-13	26513-04200.....	PACKING-licence lamp	1	1
26-14	26717-04200.....	BULB 12 V-8 W	1	1
26-15	9-98511-2.....	SCREW	2	2

LAMP (I)

Tail Lamp

LAMP (2) Fig. 27

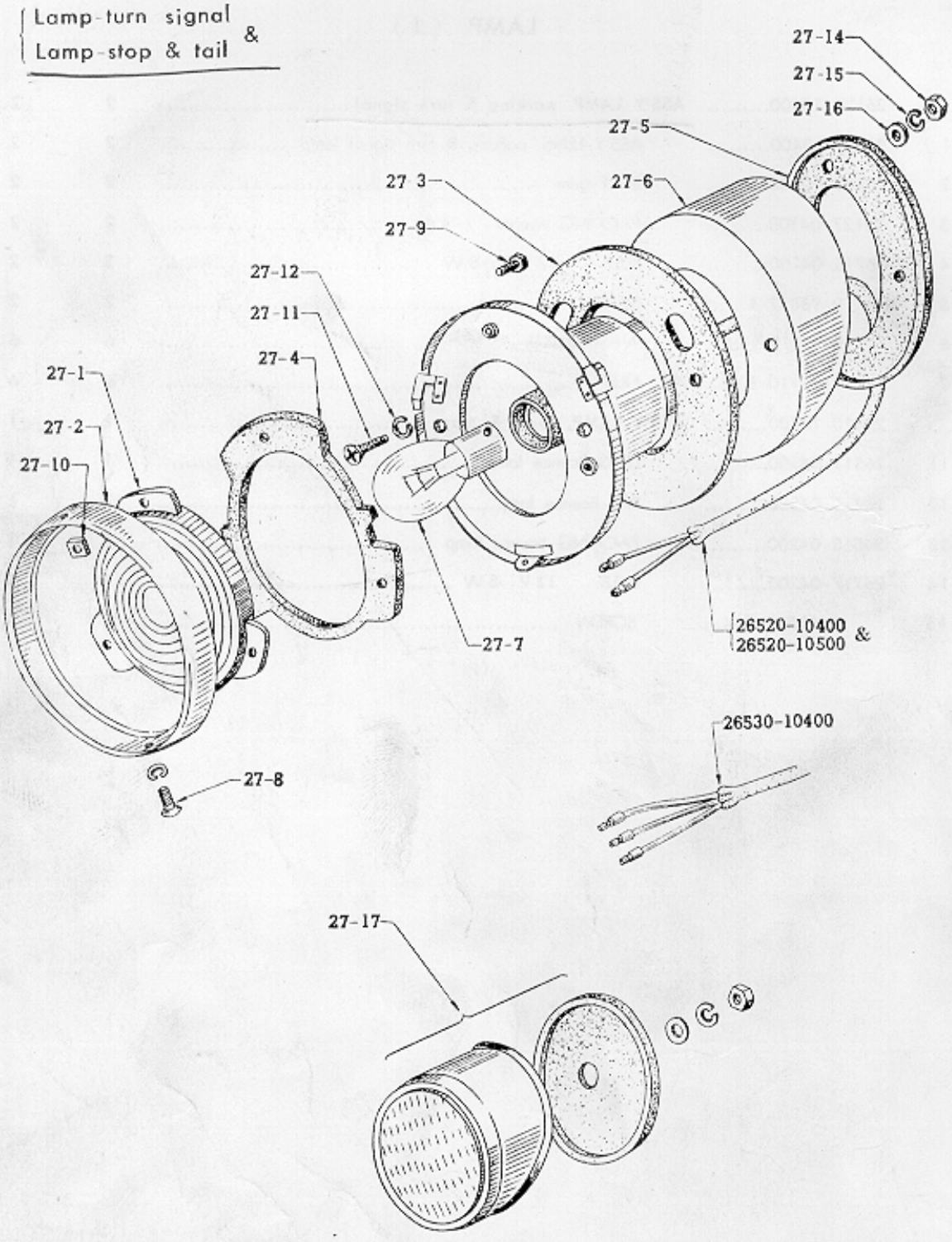

LAMP (2)

ILL. NO.	PART NO.	PART NAME	Q'TY PER SECTION SP310	Q'TY PER SECTION SPL310
	○ 26520-10400.....	**ASS'Y-LAMP, turn signal**	2	2
	○ 26520-10500.....	**ASS'Y-LAMP, turn signal (used for USA)**	-	2
	○ 26530-10400.....	**ASS'Y-LAMP, stop & tail**	2	2
27-1	26521-09700.....	LENS (amber) (used for 26520-10400)	2	2
	26521-09701.....	LENS (red) (used for 26520-10500)	-	2
	26521-09701.....	LENS (red) (used for 26530-10400)	2	2
27-2	26522-09700.....	RIM	4	4
27-3	26523-09700.....	SEAT-gum (rubber) (lamp body to adapter)	4	4
27-4	26528-09700.....	SEAT-gum (rubber) (lens to lamp body).....	4	4
27-5	○ 26528-10400.....	SEAT-gum (rubber) (adapter to body)	4	4
27-6	○ 26529-10400.....	ASS'Y-ADAPTER, turn signal lamp rear	4	4
27-7	26716-07300.....	BULB 12V- 25W (used for 26520-10400 & 26520-10500)	2	2
	26715-04200.....	BULB 12 V 25/8 W (used for 26530-10400)	2	2
27-8	3-30608-2.....	SCREW (rim to lamp body)	4	4
27-9	3-20608-1.....	SCREW — lens to lamp body	12	12
27-10	9-13106-1.....	NUT-square — lens to lamp body	12	12
27-11	3-14012-1.....	SCREW — lamp body to adapter	8	8
27-12	9-15110-1.....	WASHER-lock — lamp body to adapter	8	8
	9-98112-1.....	SCREW — adapter to body panel	8	8
27-14	9-99203-1.....	NUT — adapter to body panel	8	8
27-15	9-99903-1.....	WASHER-lock — adapter to body panel	8	8
27-16	9-15414-1.....	WASHER-plain — adapter to body panel	8	8
27-17	26560-10400.....	ASS'Y-REFLEX, reflector	2	2

Lamp – licence

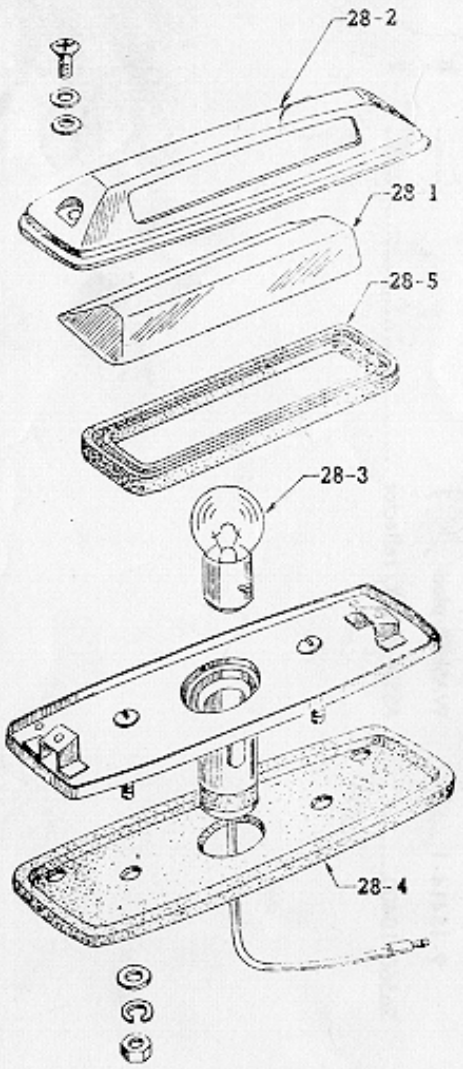

Lamp - reverse

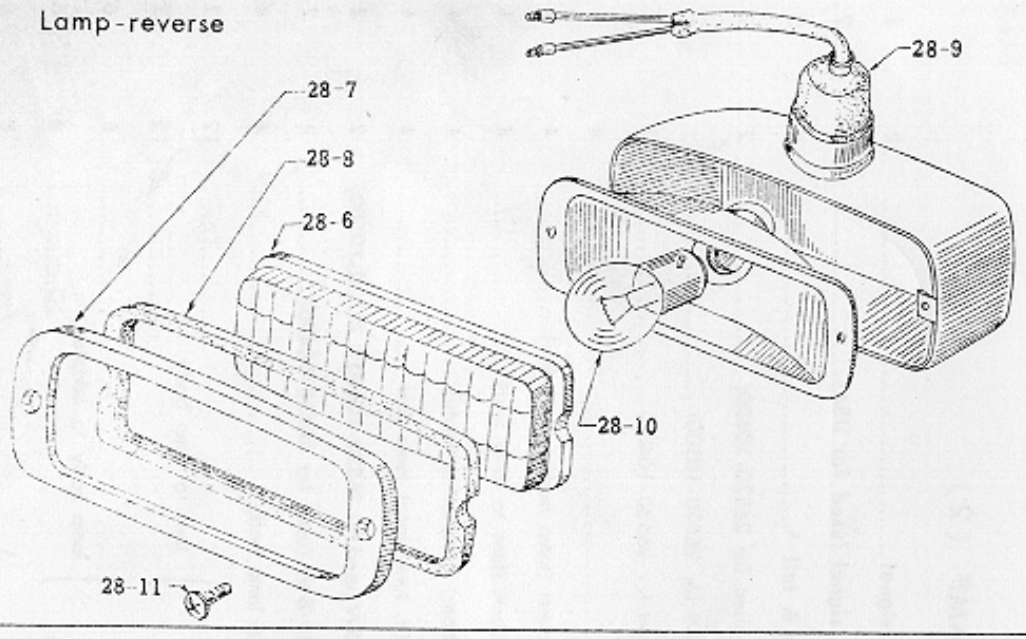

Lamp - fog

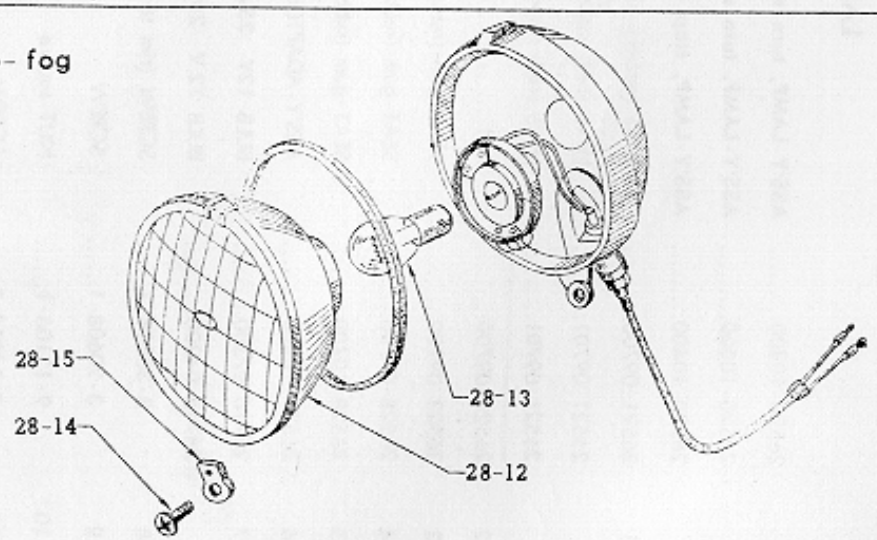

LAMP (3)

Fig. 28

LAMP (3)

ILL. NO.	PART NO.	PART NAME	Q'TY PER SECTION SP310	SPL310
	○ 26510-36700.....	**ASS'Y-LAMP, licence**	1	1
28-1	26511-32200.....	LENS	1	1
28-2	26512-32200.....	RIM	1	1
28-3	26717-04200.....	BULB 12 V- 8 W	1	1
28-4	26513-32200.....	SEAT-gum (rubber)	1	1
28-5	26518-32200.....	PACKING-lens.....	1	1
	○ 26540-10400.....	**ASS'Y-LAMP, reverse**	1	1
28-6	26231-02700.....	LENS-reverse lamp	1	1
28-7	26233-02700.....	PIN-reverse.....	1	1
28-8	26234-02700.....	PACKING-reverse lamp	1	1
28-9	○ 26547-10400.....	RUBBER-water proof	1	1
28-10	26232-02700.....	BULB.....	1	1
28-11	9-98811-2.....	SCREW	2	2
	○ 26544-10400.....	BRACKET-reverse lamp	1	1
	3-14414-1.....	SCREW	2	2
	9-15114-1.....	WASHER-lock	2	2
	26150-09401.....	**ASS'Y-LAMP, fog**	2	2
28-12	26151-34200.....	ASS'Y-LENS, fog lamp	2	2
28-13	26713-34200.....	BULB 12 V- 35 W	2	2
28-14	9-98525-2.....	SCREW	2	2
28-15	26152-30000.....	ASS'Y-HOLDER, lens	2	2

ILL. NO.	PART NO.	PART NAME	Q'TY PER SECTION SP310	Q'TY PER SECTION SPL310
		CAR HEATER		
◦	27010-10400.....	KIT-HEATER, car	1	1
		RADIO		
◦	27310-10400.....	SET-RADIO	1	-
◦	27310-10401.....	SET-RADIO	U-1	-
◦	27310-10500.....	SET-RADIO	-	1
		CLOCK		
◦	27390-10400.....	COMPLETE-CLOCK	1	-
◦	27390-10500.....	COMPLETE-CLOCK	-	1
	3-14012-1.....	SCREW	2	2
	9-15410-1.....	WASHER-plain	2	2

CLUTCH

Fig. 29

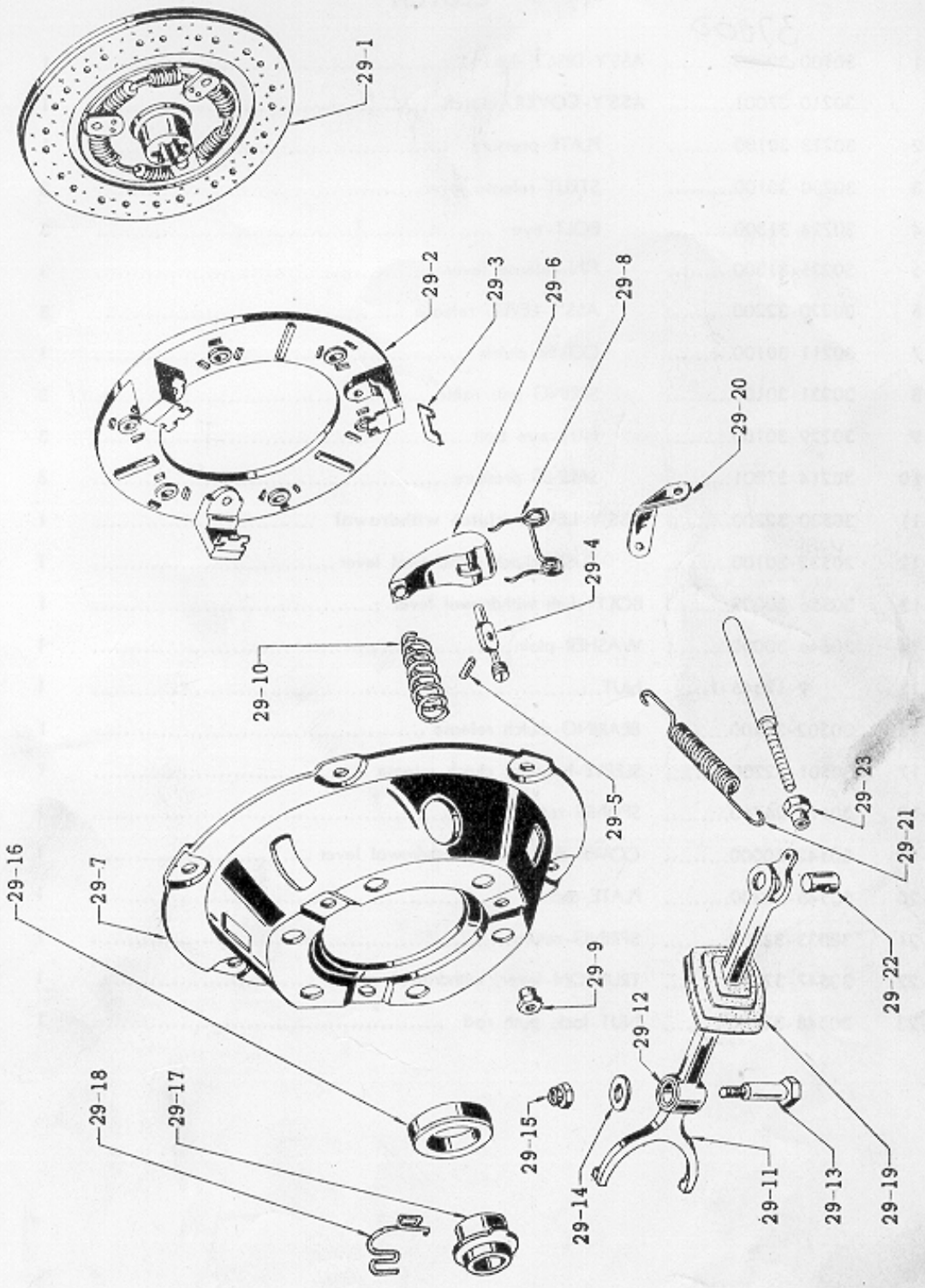

CLUTCH

ILL. NO.	PART NO.	PART NAME	Q'TY PER SECTION SP310	Q'TY PER SECTION SPL310
29-1	30100-37000	ASS'Y-DISC, clutch	1	1
	30210-37001	**ASS'Y-COVER, clutch**	1	1
29-2	30213-30100	PLATE-pressure	1	1
29-3	30230-30100	STRUT-release lever	3	3
29-4	30224-31300	BOLT-eye	3	3
29-5	30225-31300	PIN-release lever	3	3
29-6	30220-32200	ASS'Y-LEVER, release	3	3
29-7	30211-30100	COVER-clutch	1	1
29-8	30231-30100	SPRING-anti rattle	3	3
29-9	30229-30100	NUT-eye bolt	3	3
29-10	30214-37001	SPRING-pressure	6	6
29-11	30530-32200	**ASS'Y-LEVER clutch withdrawal**	1	1
29-12	30532-30100	BUSH-clutch withdrawal lever	1	1
29-13	30536-30002	BOLT-cluth withdrawal lever	1	1
29-14	30646-30000	WASHER-plain	1	1
29-15	9-12346-1	NUT	1	1
29-16	30502-32200	BEARING-clutch release	1	1
29-17	30501-32200	SLEEVE-bearing, clutch release	1	1
29-18	30513-26760	SPRING-retainer	1	1
29-19	30542-30000	COVER-dust, clutch withdrawal lever	1	1
29-20	30546-32200	PLATE-anchor	1	1
29-21	30533-32200	SPRING-return	1	1
29-22	30547-32200	TRUNION-lever, withdrawal, clutch	1	1
29-23	30548-32200	NUT-lock, push rod	1	1

TRANSMISSION CASE

Fig. 30

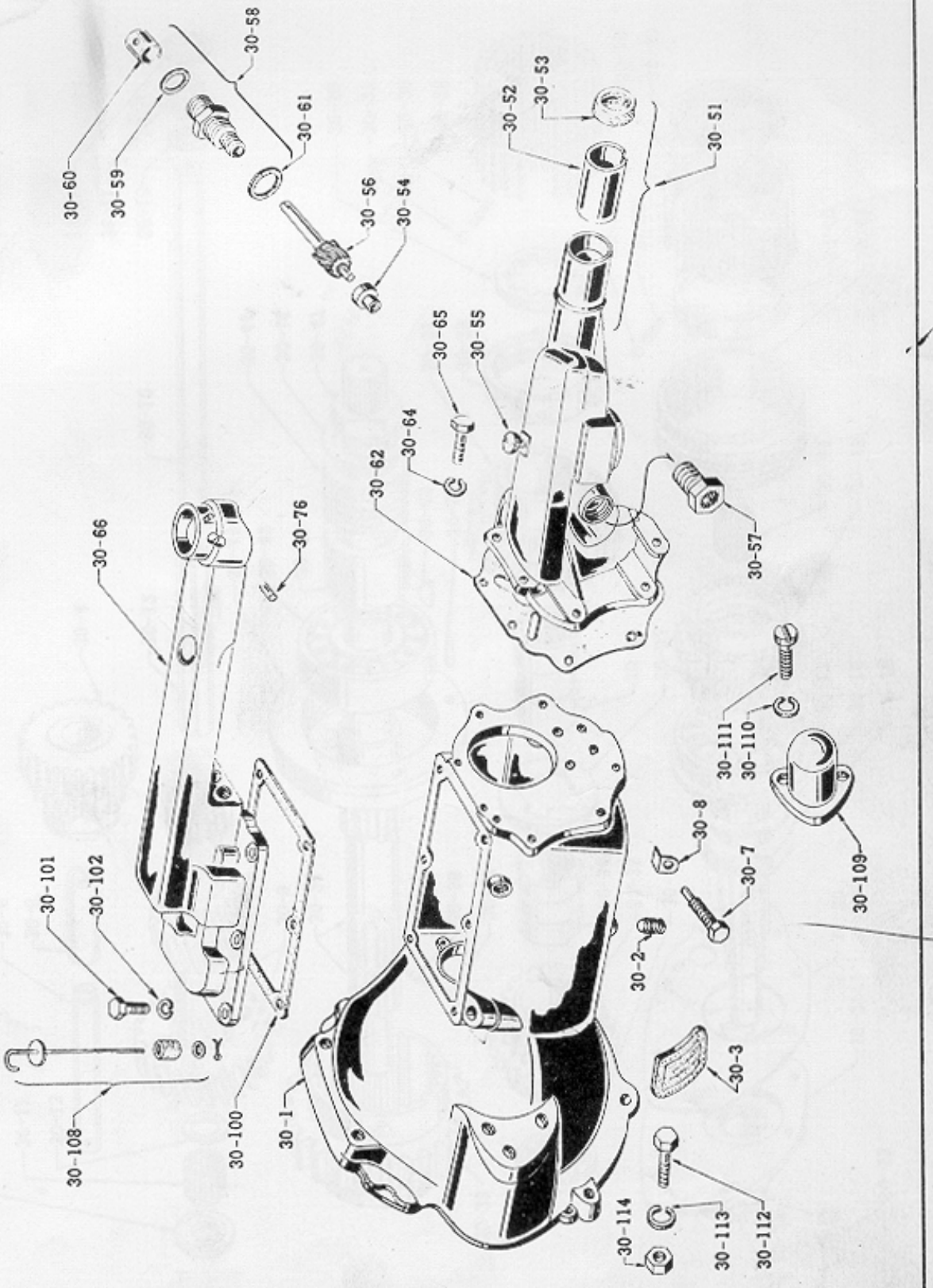

TRANSMISSION GEAR

Fig. 30-A

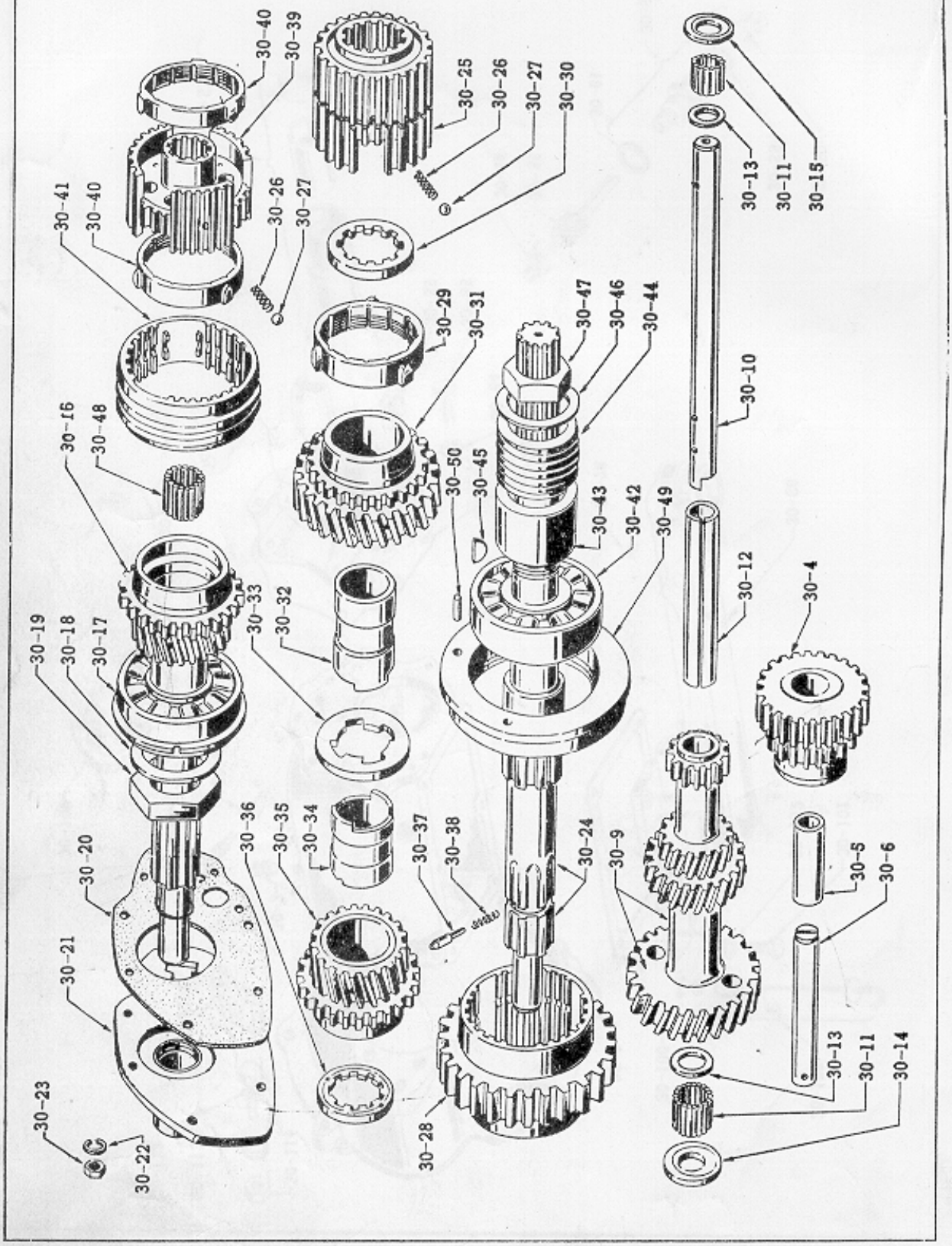

TRANSMISSION FORK & ROD

Fig. 30-B

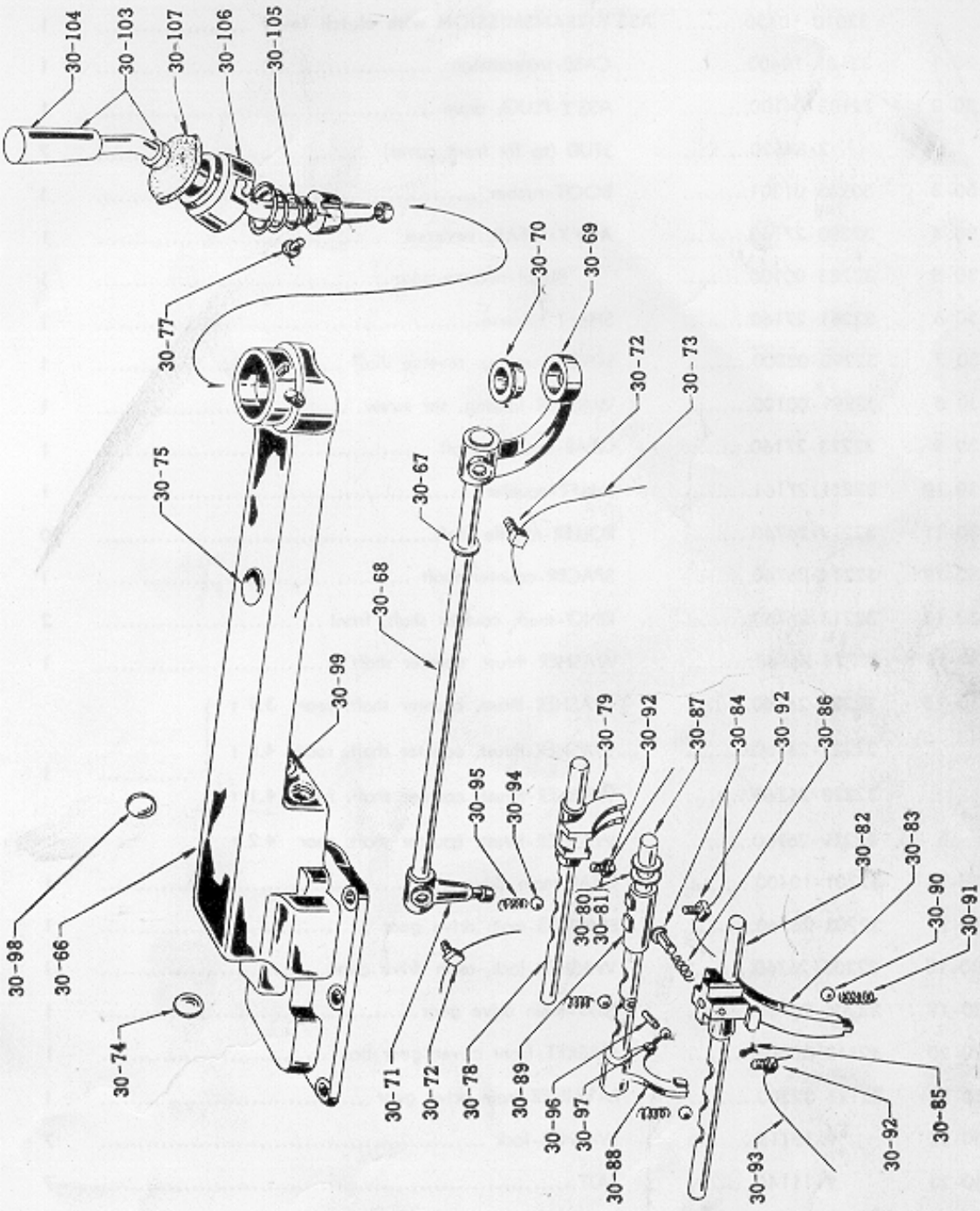

TRANSMISSION

ILL. NO.	PART NO.	PART NAME	Q'TY PER SECTION SP310	Q'TY PER SECTION SPL310
	○ 32010-10450	**ASS'Y-TRANSMISSION with clutch lever**	1	1
30-1	○ 32101-10400	CASE-transmission	1	1
30-2	32103-04100	ASS'Y-PLUG, drain	1	1
	2-84520	STUD (to fix front cover)	7	7
30-3	30543-01301	BOOT-rubber	1	1
30-4	32280-27160	**ASS'Y-GEAR, reverse**	1	1
30-5	32283-00100	BUSH-reverse gear	1	1
30-6	32281-27160	SHAFT-reverse	1	1
30-7	32290-03200	SCREW-setting, reverse shaft	1	1
30-8	32291-00100	WASHER-locking, set screw	1	1
30-9	32213-27160	GEAR-counter shaft	1	1
30-10	32211-27161	SHAFT-counter	1	1
30-11	32219-26760	ROLLER-needle shaft	20	20
30-12	32214-26760	SPACER-counter shaft	1	1
30-13	32218-26760	RING-snap, counter shaft, front	2	2
30-14	32224-26760	WASHER-thrust, counter shaft	1	1
30-15	32226-26760	WASHER-thrust, counter shaft, rear 3.9 t	1	1
	32227-26760	WASHER-thrust, counter shaft, rear 4.0 t		
	32228-26760	WASHER-thrust, counter shaft, rear 4.1 t		
	32229-26760	WASHER-thrust, counter shaft, rear 4.2 t		
30-16	32201-10400	GEAR-main drive	1	1
30-17	32203-26760	BEARING-main drive gear	1	1
30-18	32205-26760	WASHER-lock, main drive gear	1	1
30-19	32206-26760	NUT-main drive gear	1	1
30-20	32112-30800	GASKET-front cover gear box	1	1
30-21	32111-32200	RATAINER-main drive gear	1	1
30-22	9-15115	WASHER-lock	7	7
30-23	9-11145	NUT	7	7
30-24	32241-07200	SHAFT-main	1	1
30-25	32601-02700	HUB-synchronizer, 2nd speed	1	1
30-26	32602-26760	SPRING-synchronizer	6	6

TRANSMISSION FORK & ROD

Fig. 30-B

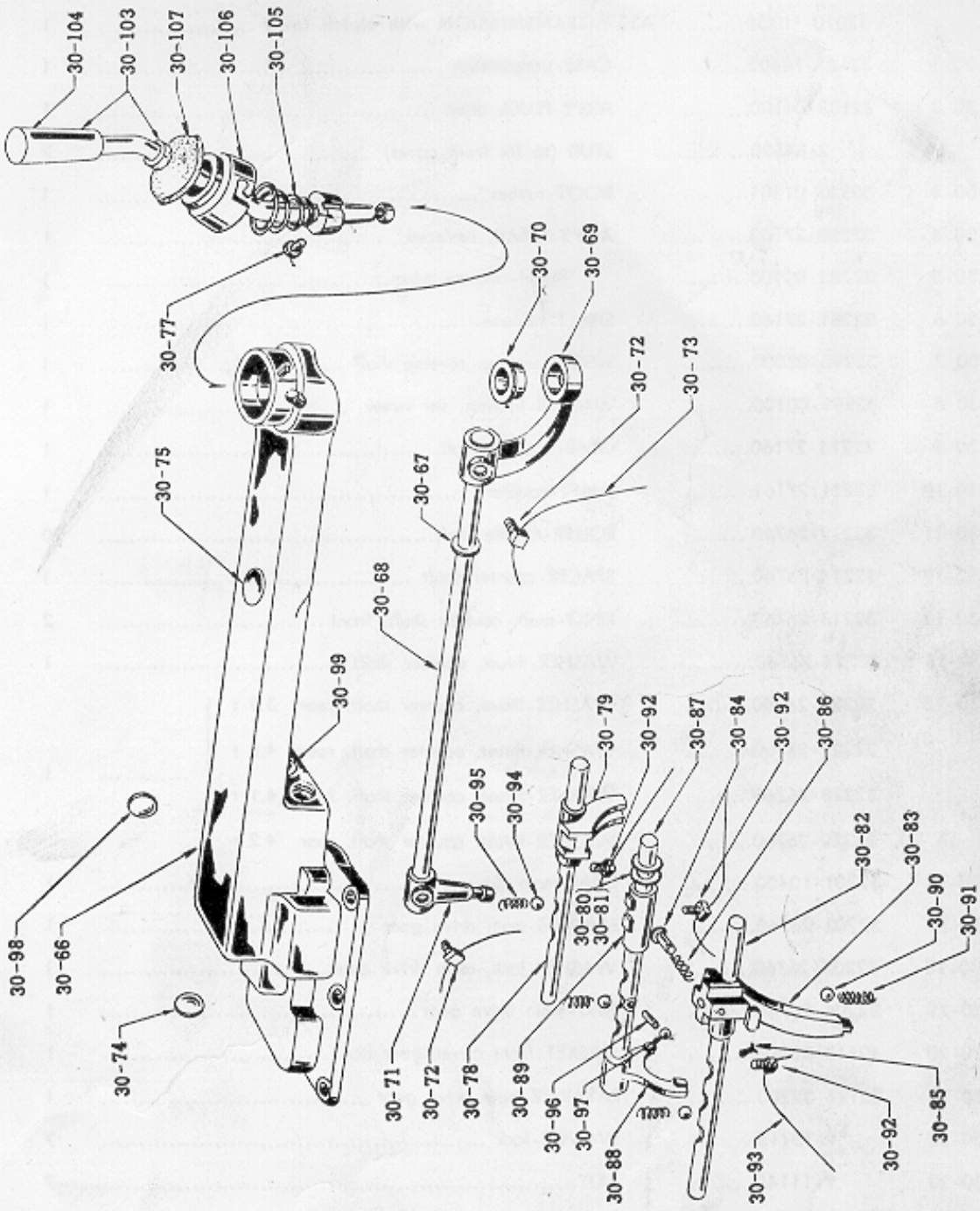

TRANSMISSION

ILL. NO.	PART NO.	PART NAME	Q'TY PER SECTION SP310	Q'TY PER SECTION SPL310
	○ 32010-10450	**ASS'Y-TRANSMISSION with clutch lever**	1	1
30-1	○ 32101-10400	CASE-transmission	1	1
30-2	32103-04100	ASS'Y-PLUG, drain	1	1
	2-84520	STUD (to fix front cover)	7	7
30-3	30543-01301	BOOT-rubber	1	1
30-4	32280-27160	**ASS'Y-GEAR, reverse**	1	1
30-5	32283-00100	BUSH-reverse gear	1	1
30-6	32281-27160	SHAFT-reverse	1	1
30-7	32290-03200	SCREW-setting, reverse shaft	1	1
30-8	32291-00100	WASHER-locking, set screw	1	1
30-9	32213-27160	GEAR-counter shaft	1	1
30-10	32211-27161	SHAFT-counter	1	1
30-11	32219-26760	ROLLER-needle shaft	20	20
30-12	32214-26760	SPACER-counter shaft	1	1
30-13	32218-26760	RING-snap, counter shaft, front	2	2
30-14	32224-26760	WASHER-thrust, counter shaft	1	1
30-15	32226-26760	WASHER-thrust, counter shaft, rear 3.9 t	1	1
	32227-26760	WASHER-thrust, counter shaft, rear 4.0 t		
	32228-26760	WASHER-thrust, counter shaft, rear 4.1 t		
	32229-26760	WASHER-thrust, counter shaft, rear 4.2 t		
30-16	32201-10400	GEAR-main drive	1	1
30-17	32203-26760	BEARING-main drive gear	1	1
30-18	32205-26760	WASHER-lock, main drive gear	1	1
30-19	32206-26760	NUT-main drive gear	1	1
30-20	32112-30800	GASKET-front cover gear box	1	1
30-21	32111-32200	RATAINER-main drive gear	1	1
30-22	9-15115	WASHER-lock	7	7
30-23	9-11145	NUT	7	7
30-24	32241-07200	SHAFT-main	1	1
30-25	32601-02700	HUB-synchronizer, 2nd speed	1	1
30-26	32602-26760	SPRING-synchronizer	6	6

ILL. NO.	PART NO.	PART NAME	Q'TY PER SECTION SP310	Q'TY PER SECTION SPL310
30-27	32603-26760	BALL-synchronizer	6	6
30-28	32243-26760 07200	GEAR-1st speed main shaft	1	1
30-29	32604-26760	RING-synchronizer, 2nd speed	1	1
30-30	32246-26760	WASHER-thrust, main shaft, rear	1	1
30-31	32251-26761	GEAR-2nd speed main shaft	1	1
30-32	32252-26761	BUSH-2nd speed main shaft gear	1	1
30-33	32253-26760	WASHER-thrust, main shaft	1	1
30-34	32262-27161	BUSH- 3rd speed main shaft gear	1	1
30-35	32261-27161	GEAR-3rd speed main shaft	1	1
30-36	32264-26761	WASHER-thrust, main shaft, front 3.9 t		
	32265-26761	WASHER-thrust, main shaft, front 4.0 t	1	1
	32266-26761	WASHER-thrust, main shaft, front 4.1 t		
30-37	32247-26760	PEG-main shaft thrust washer	1	1
30-38	32248-26760	SPRING-locking peg	1	1
30-39	32605-02700	HUB-synchronizer, 3rd & 4th speed	1	1
30-40	32607-02700	RING-synchronizer, 3rd & 4th speed	2	2
30-41	32606-02700	SLEEVE-synchronizer	1	1
30-42	32273-26760	BEARING-main shaft	1	1
30-43	32128-07200	PIECE-distance, main shaft	1	1
30-44	32701-10400	GEAR-drive, speedometer	1	1
30-45	9-27213	KEY-woodruff	1	1
30-46	34414-26760	WASHER-lock, main shaft	1	1
30-47	32142-26760	NUT-main shaft	1	1
30-48	32272-26760	ROLLER-needle, main shaft	18	18
30-49	32120 00100	**ASS'Y-RETAINER, bearing, main shaft**	1	1
30-50	32124-26760	PEG-locating	1	1
30-51	32130-08000	**ASS'Y-EXTENSION, rear**	1	1
30-52	32132-07200	BUSH-rear extension	1	1
30-53	32136-07200	SEAL-oil, rear extension	1	1
30-54	32706-26760	BUSH-speedometer pinion	1	1
30-55	38322-55100	ASS'Y-BREATHER	1	1
30-56	32703-10400	ASS'Y-PINION, speedometer drive	1	1
30-57	32718-04103	PLUG-speedometer	1	1
30-58	32707-04100	**ASS'Y-SLEEVE, speedometer drive pinion**	1	1

ILL. NO.	PART NO.	PART NAME	Q'TY PER SECTION SP310	Q'TY PER SECTION SPL310
30-59	32709-04100	RING- " O " speedometer pinion (rubber)	1	1
30-60	32717-04100	RETAINER-" O " ring, pinion sleeve	1	1
30-61	32710-04100	RING-" O " pinion sleeve (synthetic rubber)	1	1
30-62	32134-01300	GASKET-rear extension	1	1
	34424-01300	PLATE-anchor, return spring	1	1
30-64	9-15115-1	WASHER-lock	8	8
30-65	1-24532-1	BOLT-rear extension	8	8
	○ 32160-10450	**ASS'Y-COVER, transmission**	1	1
30-66	○ 32162-10400	COVER-transmission	1	1
30-67	32891-04700	RING-" O " striking rod	1	1
30-68	32892-04700	ROD-striking	1	1
30-69	32893-04700	**ASS'Y-LEVER, striking, rear**	1	1
30-70	32895-04700	BUSH-striking, rear	1	1
30-71	32896-04700	LEVER-striking, front	1	1
30-72	32803-03200	SCREW-set, fork	2	2
30-73	32804-85060	WIRE-lock	2	2
30-74	32897-04700	PLUG-welch	1	1
30-75	32898-04700	PLUG-welch	1	1
30-76	32172-03200	PIN-lock	2	2
30-77	32849-04700	PIN-pivot, control lever	2	2
30-78	32801-03200	ROD-fork, 1st & 2nd speed	1	1
30-79	32805-03200	FORK-1st & 2nd speed	1	1
30-80	32814-03200	SHIM-stopper, adjusting shaft rod 0.5 t	0~1	0~1
30-81	32814-03201	SHIM-stopper, adjusting shaft rod 1.0 t	0~2	0~2
30-82	32816-03200	ROD-fork, reverse	1	1
30-83	32819-03200	FORK-reverse	1	1
30-84	32823-03200	PIN-fork reverse	1	1
30-85	9-21118	PIN-cotter	1	1
30-86	32824-03200	SPRING-pin, reverse fork	1	1
30-87	32809-03200	ROD-fork 3rd & 4th speed	1	1
30-88	32811-03200	FORK-3rd & 4th speed	1	1
30-89	32813-03200	BRACKET-3rd & 4th speed	1	1
30-90	32828-26760	BALL-inter lock	1	1
30-91	32825-26761	SPRING-poppet pin reverse	1	1

ILL. NO.	PART NO.	PART NAME	Q'TY PER SECTION SP310	SPL310
30-92	32803-03200.....	SCREW-set, fork	4	4
30-93	32804-85060.....	WIRE-lock	4	4
30-94	32829-26760.....	BALL-check	3	3
30-95	32830-03200.....	SPRING-poppet, shaft rod	3	3
30-96	32826-03200.....	PIN-inter lock	1	1
30-97	32827-26760.....	BALL-inter lock	4	4
30-98	32167-03200.....	PLUG-welch	1	1
30-99	32168-03200.....	PLUG-welch	2	2
30-100	32169-03200.....	GASKET-cover, transmission	1	1
30-101	1-11522.....	BOLT	6	6
30-102	9-15115.....	WASHER-lock	6	6
30-103	32841-10400.....	**ASS'Y-LEVER, control**	1	1
30-104	32865-10400.....	KNOB-lever, control	1	1
30-105	32850-~~04700~~ 12900	SPRING-lever, control 2.9 ϕ	1	1
30-106	32852-04700.....	CAP-cover, transmission	1	1
30-107	32853-04700.....	BOOT-rubber	1	1
30-108	32150-03200.....	ASS'Y-STICK, oil level dip.....	1	1
30-109	30413-32200.....	COVER-starter pinion	1	1
30-110	9-15114-1.....	WASHER-lock	3	3
30-111	30414-00100.....	SCREW.....	3	3
30-112	1-11525-1.....	BOLT	6	6
30-113	9-15115-1.....	WASHER-lock	6	6
30-114	9-11145-1.....	NUT.....	6	6

36010-10400 HAND BRAKE CONTROL Fig. 31

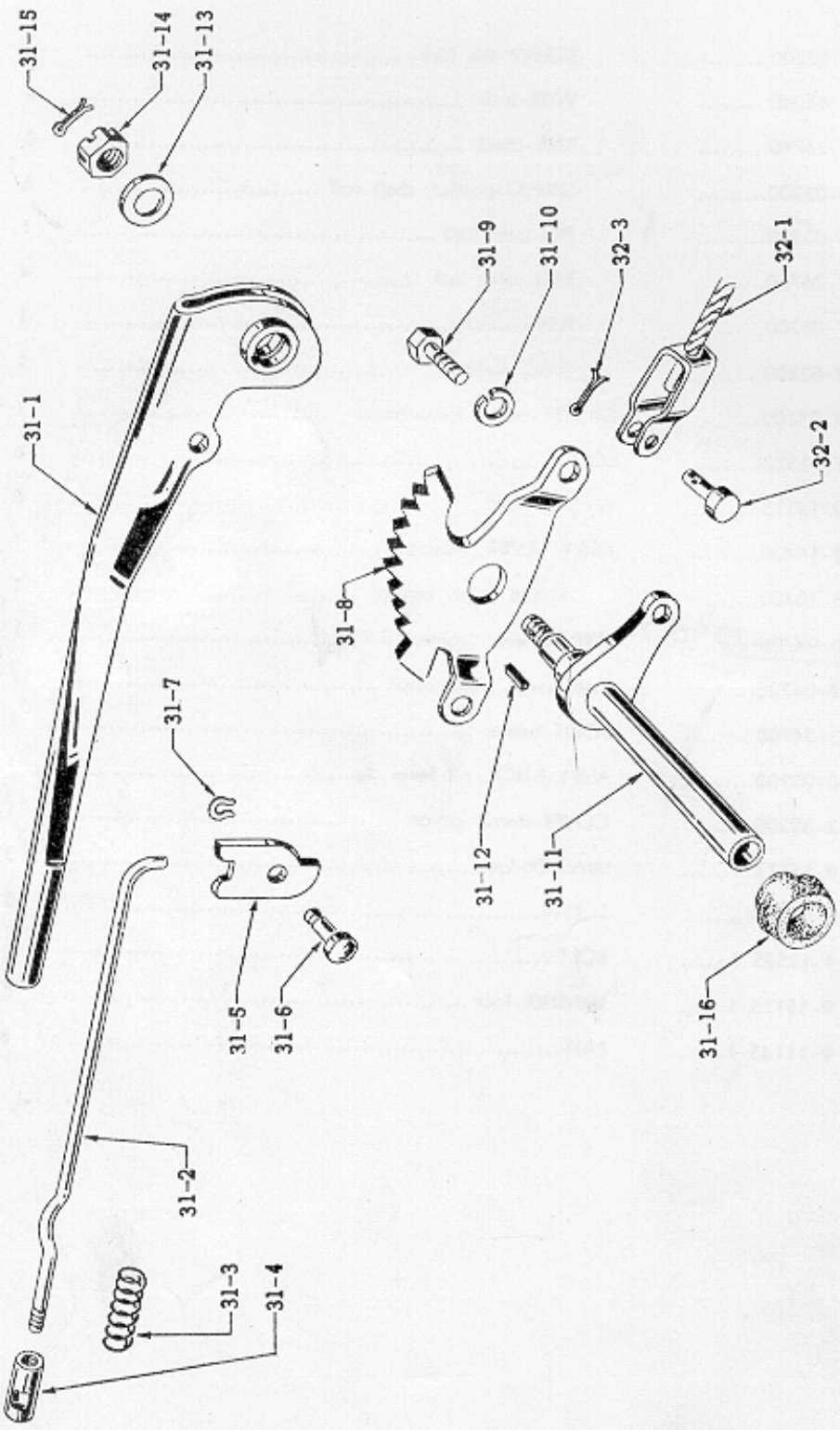

ILL. NO.	PART NO.	PART NAME	Q'TY PER SECTION SP310	Q'TY PER SECTION SPL310
	36010-10400.....	**ASS'Y-CONTROL, hand brake**	1	1
31-1	36310-10400.....	ASS'Y-LEVER, hand brake	1	1
31-2	36327-04101.....	ROD-release, hand brake	1	1
31-3	36330-04100.....	SPRING-release rod	1	1
31-4	36329-04100.....	BUTTON-release, hand brake.....	1	1
31-5	36332-04100.....	PAWL-ratchet	1	1
31-6	36339-04100.....	PIN-pawl	1	1
31-7	41058-10360.....	WASHER-"C" type	1	1
31-8	36320-10400.....	PLATE-ratchet	1	1
31-9	1-14516-1.....	BOLT } ass'y hand lever fix to body floor	2	2
31-10	9-15115-1.....	WASHER-lock }	2	2
31-11	36433-10400.....	ASS'Y-SHAFT, hand brake lever.....	1	1
31-12	9-28316.....	KEY-feather	1	1
31-13	9-15416-1.....	WASHER-plain.....	1	1
31-14	9-11946-1.....	NUT	1	1
31-15	9-21222-1.....	PIN-cotter	1	1
31-16	36463-10400.....	COVER-dust, lever shaft	1	1

HAND BRAKE CONTROL

HAND BRAKE LINKAGE

Fig. 32

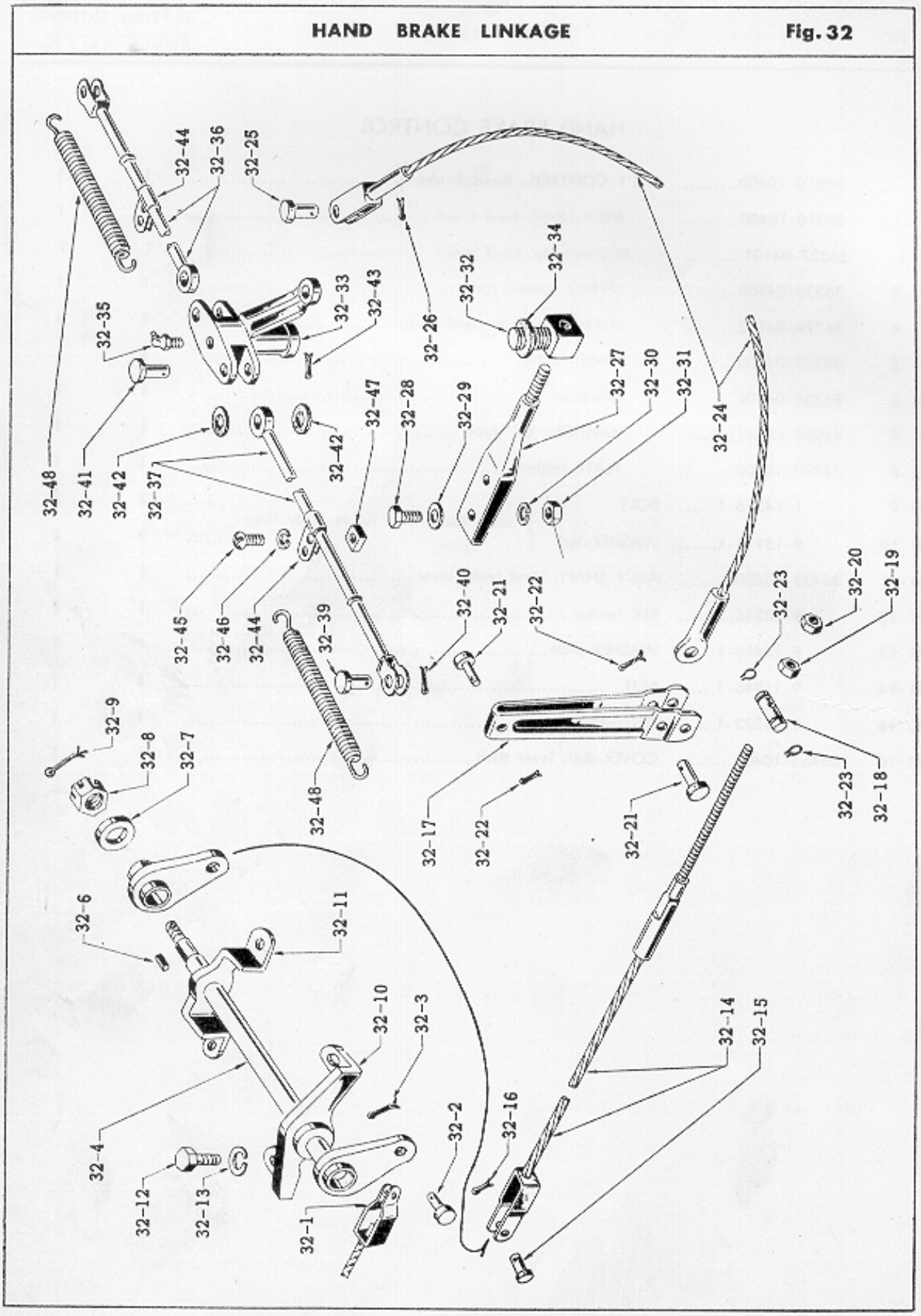

36450 16404

HAND BRAKE LINKAGE

ILL. NO.	PART NO.	PART NAME	Q'TY PER SECTION SP310	Q'TY PER SECTION SPL310
32-1	36402-10400	ASS'Y-CABLE, hand brake, front	1	1
32-2	36428-04100	PIN-clevis } lever shaft arm to front cable & idler shaft arm to front cable	2	2
32-3	9-21118-1	PIN-cotter } lever shaft arm to front cable & idler shaft arm to front cable	2	2
32-4	36550-10401	ASS'Y-SHAFT, idler, hand brake	1	1
32-6	9-28316-1	KEY-feather	1	1
32-7	9-15416-1	WASHER-plain	1	1
32-8	9-11746-1	NUT	1	1
32-9	9-21222-1	PIN-cotter	1	1
32-10	36342-04100	BRACKET-hand brake lever shaft	1	1
32-11	36385-10400	BRACKET-idler shaft, hand brake	1	1
32-12	1-24518-1	BOLT	4	4
32-13	9-15115	WASHER-lock	4	4
32-14	36450-10400	ASS'Y-CABLE, hand brake, middle	1	1
32-15	36428-04100	PIN-clevis } middle cable to idler shaft	1	1
32-16	9-21118-1	PIN-cotter } middle cable to idler shaft	1	1
32-17	36510-04100	ASS'Y-ARM, swing, hand brake	1	1
32-18	36425-04100	PIN-swing arm, hand brake	1	1
32-19	36437-04100	NUT-cable, hand brake	1	1
32-20	9-11344-1	NUT-lock	1	1
32-21	36541-30000	PIN-clevis } swing arm to bracket & swing arm to rear cable	2	2
32-22	9-21018	PIN-cotter } swing arm to bracket & swing arm to rear cable	2	2
32-23	36471-04100	RING-snap, hand brake	2	2
32-24	36451-10400	ASS'Y-CABLE, hand brake, rear	1	1
32-25	36541-30000	PIN-clevis } rear cable to balance lever	1	1
32-26	9-21018	PIN-cotter } rear cable to balance lever	1	1
32-27	36510-30000	COMPLETE-SUPPORT, brake balance lever	1	1
32-28	1-24520-1	BOLT	2	2
32-29	9-15415-1	WASHER-plain	2	2
32-30	9-15215	WASHER-lock	2	2
32-31	9-11145-1	NUT	2	2

ILL. NO.	PART NO.	PART NAME	Q'TY PER SECTION SP310	Q'TY PER SECTION SPL310
32-32	36514-04100.....	CARRIER-balance lever brake	1	1
32-33	36518-30000.....	LEVER-balance, hand brake	1	1
32-34	36523-30000.....	RING-felt, balance lever.....	1	1
32-35	9-32302.....	NIPPLE-grearse	1	1
32-36	36530-04100.....	ROD-cross, hand brake, short	1	1
32-37	36531-04100.....	ROD-cross, hand brake, long	1	1
	36537-30000.....	FERRULE-cross rod	1	1
32-39	36541-30000.....	PIN-clevis } cross rod to rear with cylinder	2	2
32-40	9-21018.....	PIN-cotter }	2	2
32-41	36538-30000.....	PIN-clevis } balance lever to cross rod	2	2
32-42	36543-30000.....	FELT-ring }	4	4
32-43	9-21018.....	PIN-cotter	2	2
32-44	36544-30000.....	BRACKET-hanger cross rod pull off spring.....	2	2
32-45	3-14010-1.....	SCREW } hanger bracket to cross rod	2	2
32-46	9-15110.....	WASHER-lock }	2	2
32-47	9-13140-1.....	NUT-square }	2	2
32-48	36545-30000.....	SPRING-pull off cross rod	2	2

PROPELLER SHAFT

Fig. 33

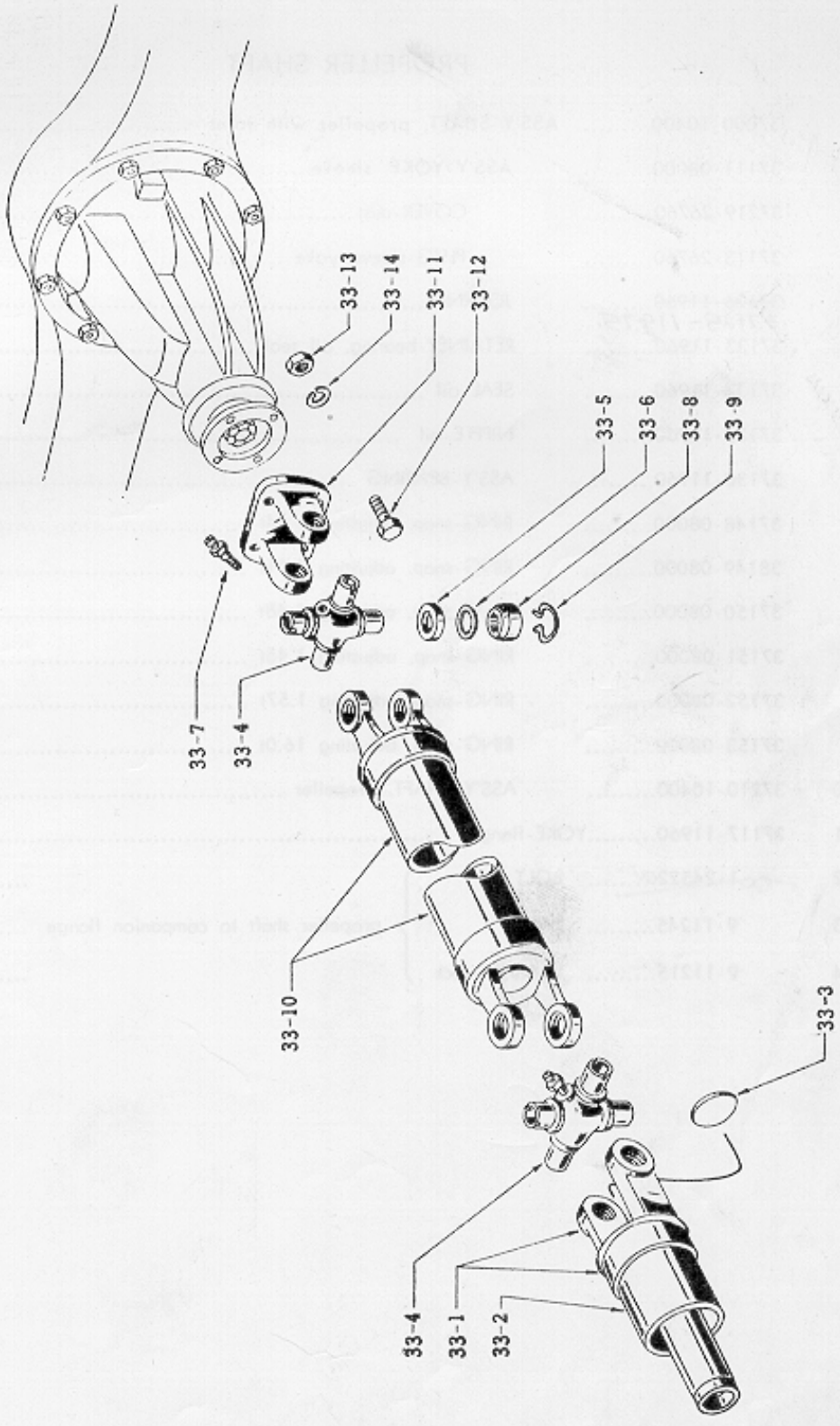

ILL. NO.	PART NO.	PART NAME	Q'TY PER SECTION SP310	Q'TY PER SECTION SPL310
		PROPELLER SHAFT		
	37000-10400	**ASS'Y-SHAFT, propeller with joint**	1	1
33-1	37111-08000	**ASS'Y-YOKE, sleeve**	1	1
33-2	37219-26760	COVER-dust	1	1
33-3	37113-26760	PLUG-sleeve yoke	1	1
33-4	~~37126-11960~~ 37125-11975	JOURNAL	2	2
33-5	37133-11960	RETAINER-bearing, oil seal	8	8
33-6	37134-11960	SEAL-oil	8	8
33-7	37138-11960	NIPPLE-oil	2	2
33-8	37130-11960	ASS'Y-BEARING	8	8
33-9	37148-08000	RING-snap, adjusting 1.54t	8	8
	38149-08000	RING-snap, adjusting 1.51t		
	37150-08000	RING-snap, adjusting 1.48t		
	37151-08000	RING-snap, adjusting 1.45t		
	37152-08000	RING-snap, adjusting 1.57t		
	37153-08000	RING-snap, adjusting 16.0t		
33-10	37210-10400	ASS'Y-SHAFT, propeller	1	1
33-11	37117-11960	YOKE-flange	1	1
33-12	~~01-24522~~	BOLT (propeller shaft to companion flange)	4	4
33-13	9-11245	NUT (propeller shaft to companion flange)	4	4
33-14	9-11215	WASHER-lock (propeller shaft to companion flange)	4	4

FRONT SUSPENSION Fig. 34

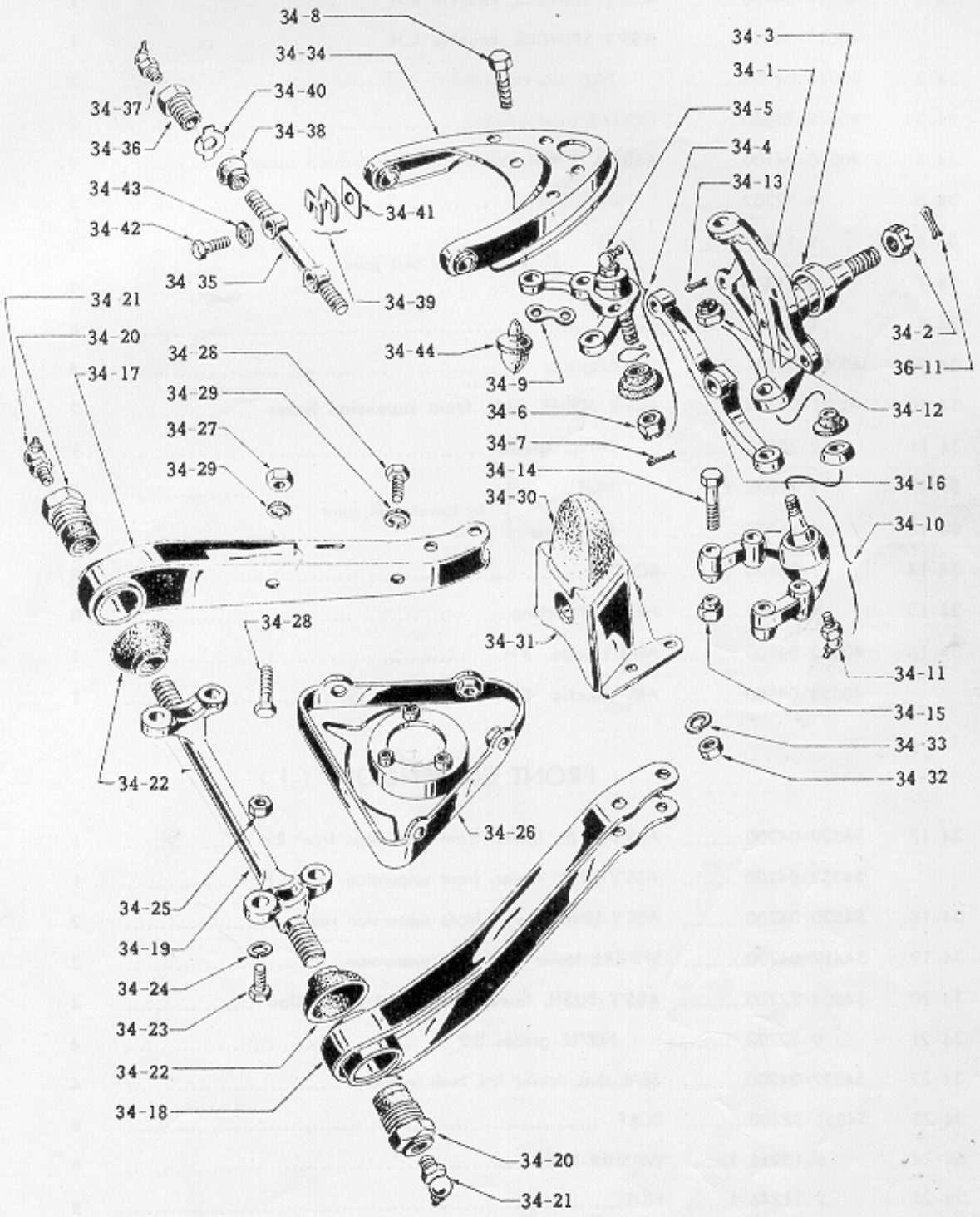

ILL. NO.	PART NO.	PART NAME	Q'TY PER SECTION SP310	Q'TY PER SECTION SPL310

SWIVEL AXLE

34-1	40014-04150	**ASS'Y-SPINDLE, knuckle R.H.**	1	1
	40015-04150	**ASS'Y-SPINDLE, knuckle L.H.**	1	1
34-2	40040-04100	NUT-knuckle spindle	2	2
34-3	40029-25660	COLLAR-front spindle	2	2
34-4	40070-04100	**ASS'Y-JOINT, ball, front suspension upper**	2	2
34-5	9-32302	NIPPLE-grease	2	2
34-6	9-11847-1	NUT } to upper ball joint	2	2
34-7	9-21325	PIN-cotter } to upper ball joint	2	2
34-8	1-24516-1	BOLT	8	8
34-9	40091-08000	PLATE-locking	4	4
34-10	40071-04200	**ASS'Y-JOINT, ball, front supension lower**	2	2
34-11	9-32202	NIPPLE-grease	1	1
34-12	9-11848-1	NUT } to lower ball joint	2	2
34-13	9-21330	PIN-cotter } to lower ball joint	2	2
34-14	1-24550	BOLT	8	8
34-15	9-12445	NUT-self locking	8	8
34-16	40052-04100	ARM-knuckle R.H.	1	1
	40053-04100	ARM-knuckle L.H.	1	1

FRONT SUSPENSION (I)

34-17	54529-04200	ASS'Y-LINK, lower, front suspension front R.H.	1	1
	54552-04200	ASS'Y-LINK, lower, front suspension front L.H.	1	1
34-18	54530-04200	ASS'Y-LINK, lower, front suspension rear	2	2
34-19	54419-04200	SPINDLE-lower link, front suspension	2	2
34-20	54504-32200	**ASS'Y-BUSH, lower link, front suspension**	4	4
34-21	9-32202	NIPPLE-grease B 2	4	4
34-22	54539-04200	SEAL-dust, lower link bush (rubber)	4	4
34-23	54551-32200	BOLT	8	8
34-24	9-15216-1	WASHER-lock	8	8
34-25	9-11246-1	NUT	8	8
34-26	54030-04200	ASS'Y-SEAT, front spring, lower R.H.	1	1
	54033-04200	ASS'Y-SEAT, front spring lower L.H.	1	1

ILL. NO.	PART NO.	PART NAME	Q'TY PER SECTION SP310	Q'TY PER SECTION SPL310
34-27	9-11146-1	NUT-plain	4	4
34-28	9-14620-1	BOLT	8	8
34-29	9-15116-1	WASHER-lock	8	8
34-30	54050-09400	ASS'Y-BUMPER, rebound, front suspension	2	2
34-31	54067-09400	ASS'Y-BRACKET, rebound bumper front suspension R.H.	1	1
	54068-09400	ASS'Y-BRACKET, rebound bumper front suspension L.H.	1	1
34-32	9-11145-1	NUT-plain	2	2
34-33	9-15115-1	WASHER-lock	2	2
34-34	54533-04100	ASS'Y-LINK, upper, front suspension	2	2
34-35	54536-04101	SPINDLE-upper link, front suspension	2	2
34-36	54507-04100	ASS'Y-BUSH, upper link, front suspension	4	4
34-37	9-32202	NIPPLE-grease	4	4
34-38	54541-04100	SEAL-dust upper link bush	4	4
34-39	54542-04101	SHIM-camber, A 1.0t	4	4
	54543-04101	SHIM-camber, B 2.0t	4	4
	54544-04101	SHIM-camber, C 4.0t	4	4
34-40	54509-04100	WASHER-lock	4	4
34-41	54546-04101	SHIM-caster, rear 1.2t	0-2	0-2
34-42	1-24740-1?	BOLT	4	4
34-43	9-16217-1	WASHER-lock	4	4
34-44	54053-04100	BUMBER-rubber, rebound, front suspension	2	2

FRONT BRAKE Fig. 35

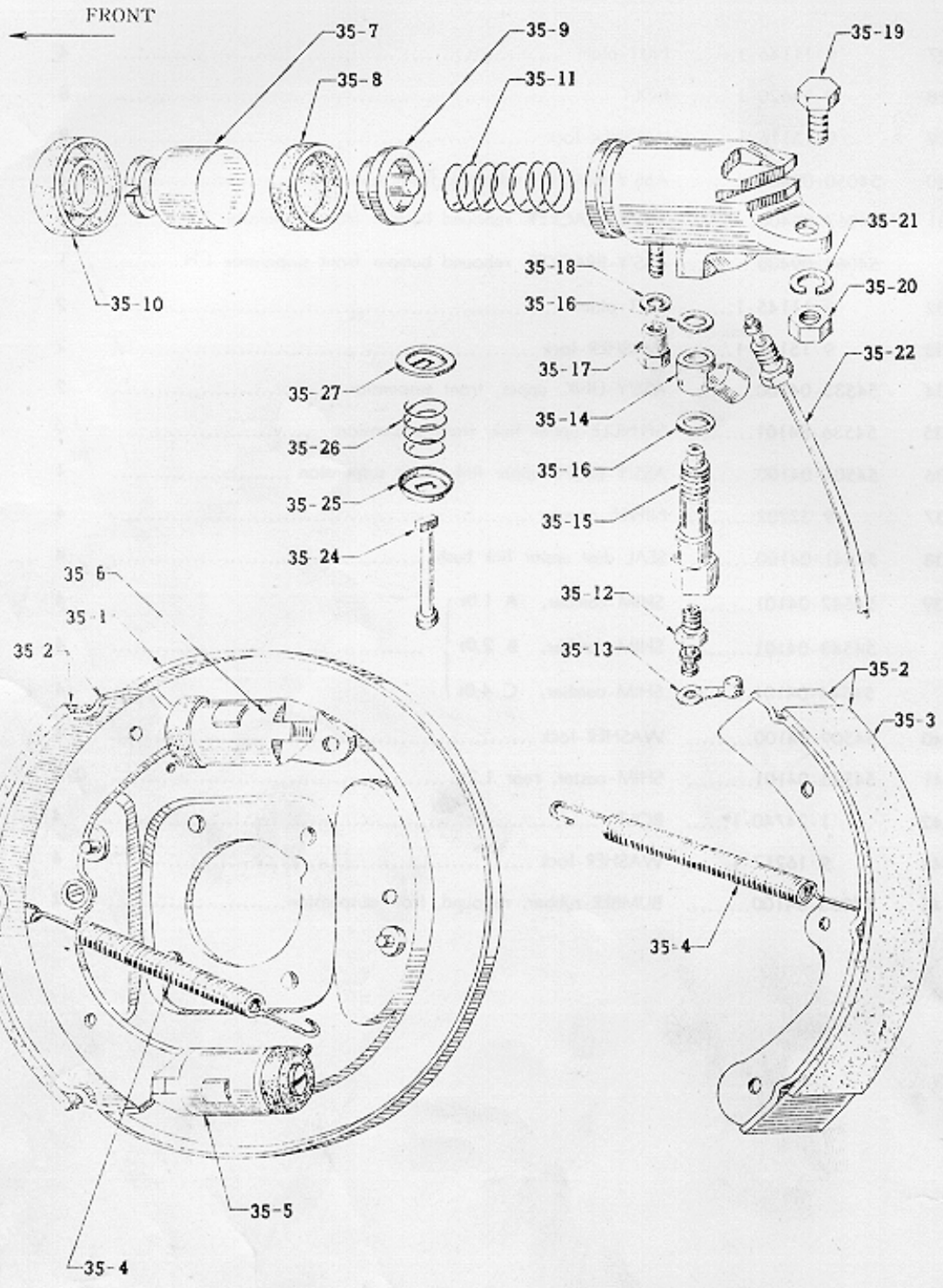

FRONT BRAKE

ILL. NO.	PART NO.	PART NAME	Q'TY PER SECTION SP310	SPL310
	41000-10502	**ASS'Y-BRAKE, front R.H.**	1	1
	41010-10502	**ASS'Y-BRAKE, front L.H.**	1	1
35-1	41020-10501	ASS'Y-DISC, front brake R.H.	1	1
	41030-10501	ASS'Y-DISC, front brake L.H.	1	1
35-2	41060-16500	**ASS'Y-SHOE, front brake**	4	4
35-3	41066-10500	LINING-brake (resin mould)	4	4
35-4	41090-10600	SPRING-return, front brake shoe	4	4
35-5	41100-10600 18400	**ASS'Y-CYLINDER, front wheel, fore R.H.** (1")	1	1
	41102-10600 18400	**ASS'Y-CYLINDER, front wheel, fore L.H.** (1")	1	1
35-6	41101-10600 18400	**ASS'Y-CYLINDER, front wheel, after R.H.** (1")	1	1
	41103-10600 18400	**ASS'Y-CYLINDER, front wheel, after L.H.** (1")	1	1
35-7	41110-10500	PISTON-front wheel cylinder (steel)	4	4
35-8	41114-10500	CUP-piston front wheel cylinder (oil resistance rubber)	4	4
35-9	41116-10500	SEAT-spring wheel cylinder front	4	4
35-10	41123-10500	COVER-dust shield (rubber)	4	4
35-11	41125-30001	SPRING-piston wheel cylinder front	4	4
35-12	41128-30001	SCREW-bleeder, wheel cylinder	4	4
35-13	41129-30001	CAP-bleeder screw (oil resistance rubber)	4	4
35-14	41130-04100	CONNECTOR-front wheel cylinder	2	2
35-15	41131-10500	BOLT-connector, front wheel cylinder	2	2
35-16	41158-04100	WASHER-front wheel cylinder	4	4
35-17	41157-30000	NUT-special, wheel cylinder	4	4
35-18	9-15114-1	WASHER-lock	4	4
35-19	1-14525-1	BOLT	4	4
35-20	9-11145-1	NUT	4	4
35-21	9-15115-1	WASHER-lock	4	4
35-22	41140-10500	ASS'Y-TUBE, bridge, front R.H.	1	1
	41141-10500	ASS'Y-TUBE, bridge, front L.H.	1	1
35-24	44081-32201	PIN-anti rattle rear brake shoe	4	4
35-25	44082-32200	SEAT-spring anti rattle shoe	4	4
35-26	44083-32200	SPRING-anti rattle rear brake shoe	4	4
35-27	44084-32201	RETAINER-spring, anti rattle shoe	4	4

FRONT DRUM & WHEEL

Fig. 36

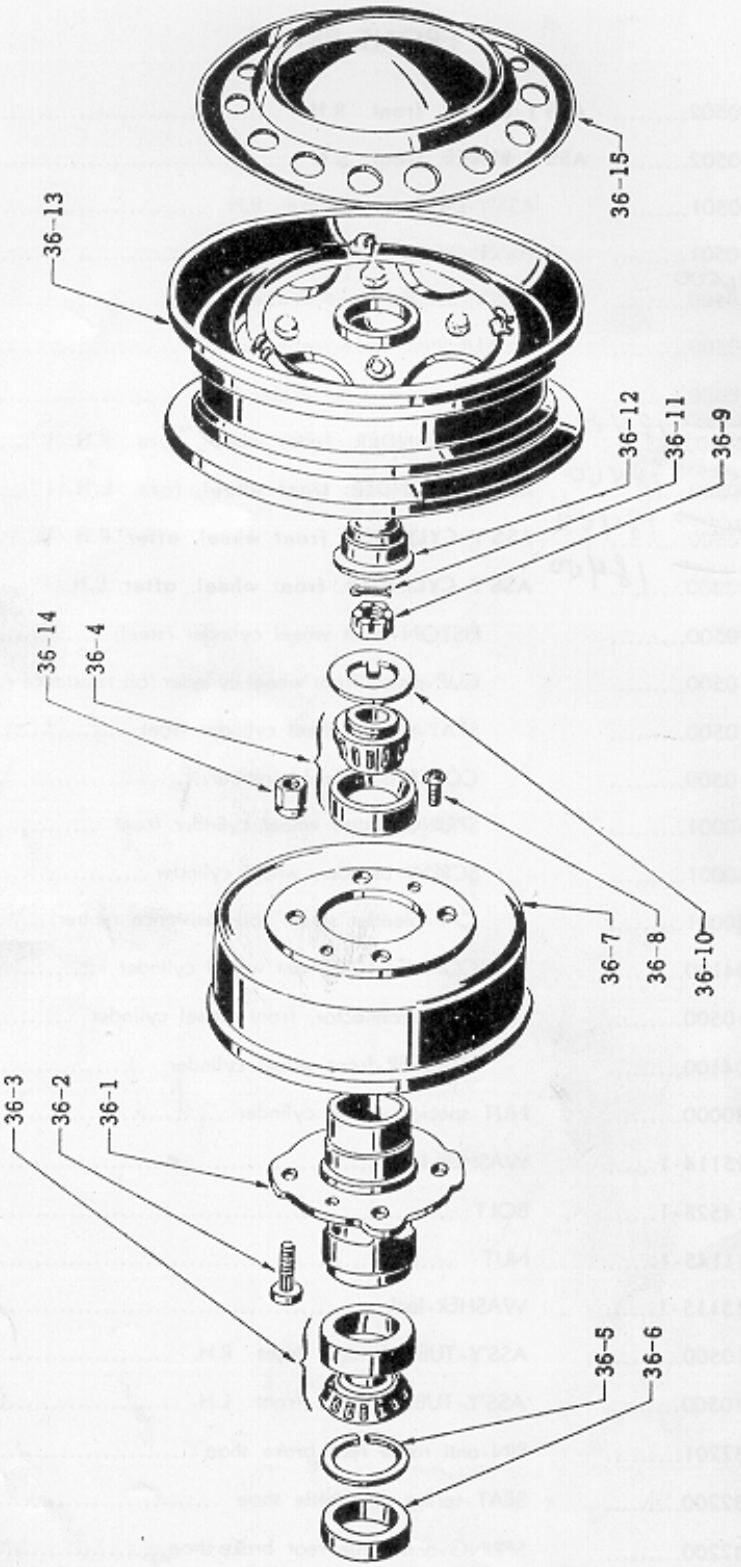

FRONT DRUM & WHEEL

Fig. 36

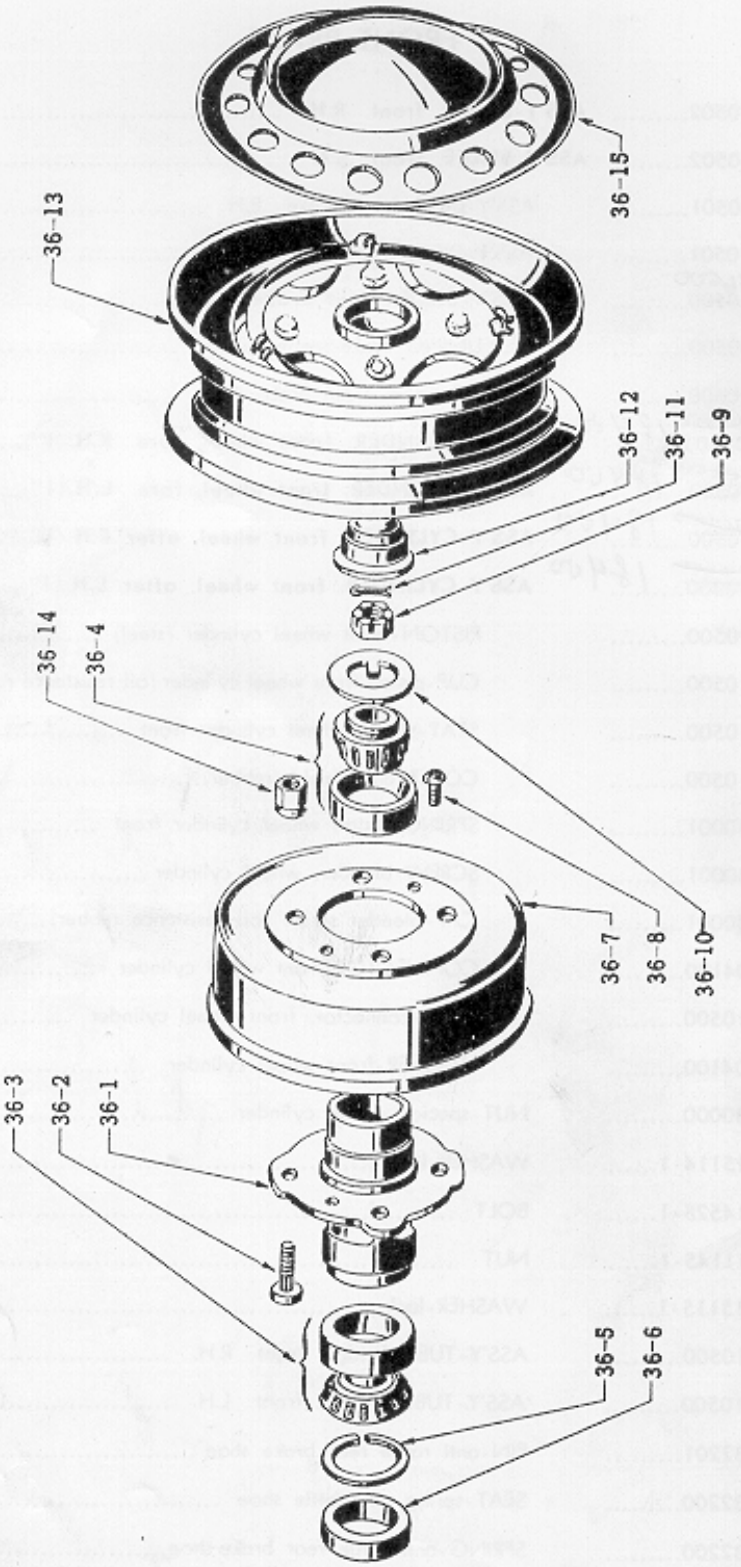

ILL. NO.	PART NO.	PART NAME	Q'TY PER SECTION SP310	Q'TY PER SECTION SPL310

FRONT HUB & DRUM

36-1	40202-04151	**ASS'Y-HUB road wheel, front**	2	2
36-2	40221-04101	BOLT-hub, road wheel	8	8
36-3	38440-14361	BEARING-taper roller (front wheel inner)	2	2
36-4	40215-10360	BEARING-taper roller (front wheel outer)	2	2
36-5	40231-04100	SPACER-oil seal, front hub	2	2
36-6	40227-08000	SEAL-oil, front hub	2	2
36-7	40206-~~10500~~ 18700	DRUM-brake	2	2
36-8	3-24414-1	SCREW-machine flat head cross recess	4	4
36-9	40040-04100	NUT-knuckle spindle	2	2
36-10	40037-04100	WASHER-front wheel bearing	2	2
36-11	9-21440	PIN-cotter (to spindle nut)	2	2
36-12	40234-04100	CAP-hub, front wheel	2	2

ROAD WHEEL

36-13	40300-10400	ASS'Y-ROAD WHEEL	5	-
	40300-10500	ASS'Y-ROAD WHEEL	U-5	5
36-14	40225-04100	NUT-road wheel	16	16
36-15	40315-10400	ASS'Y-COVER, road wheel	4	4

REAR AXLE

Fig. 37

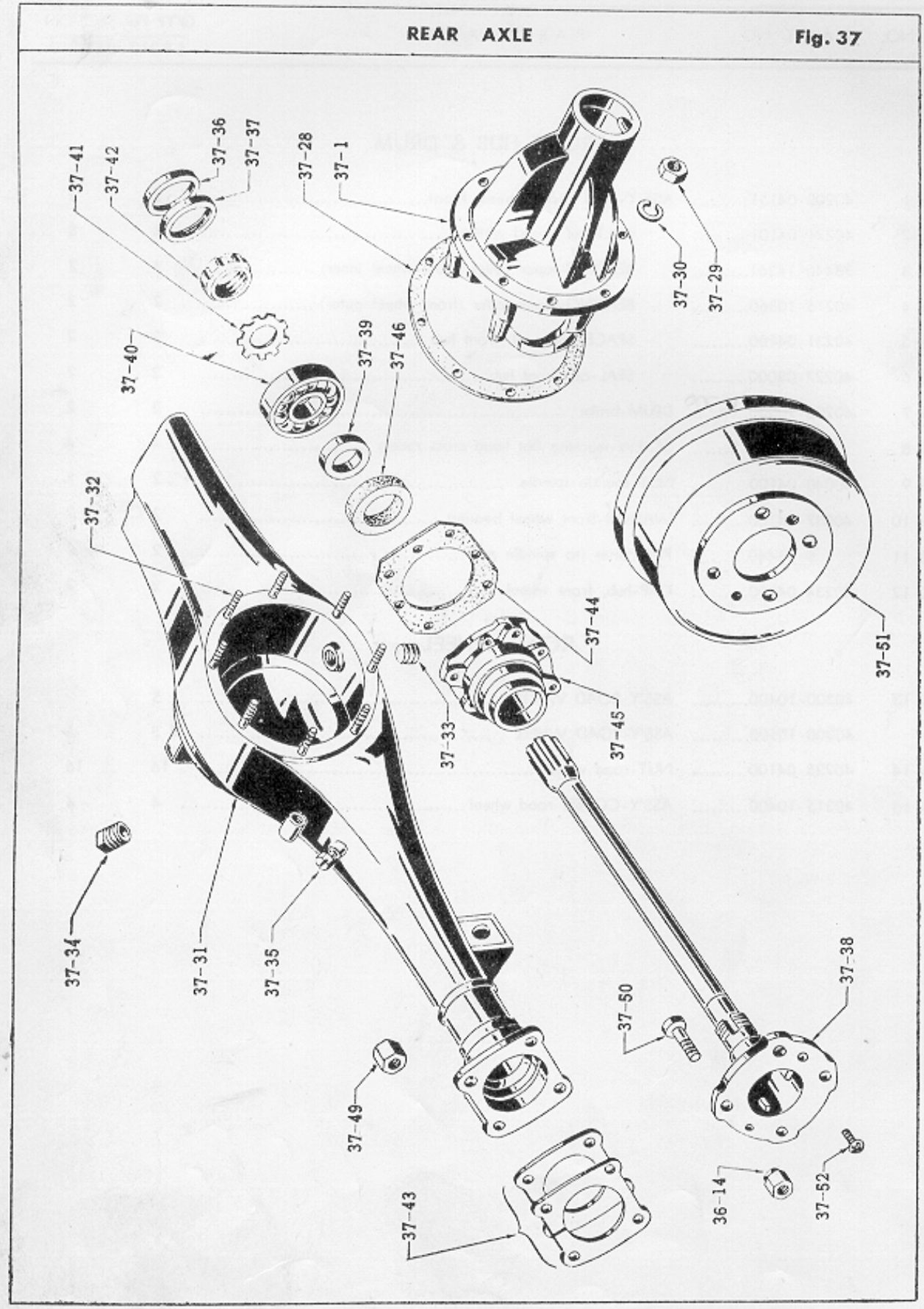

REAR AXLE

Fig. 37-A

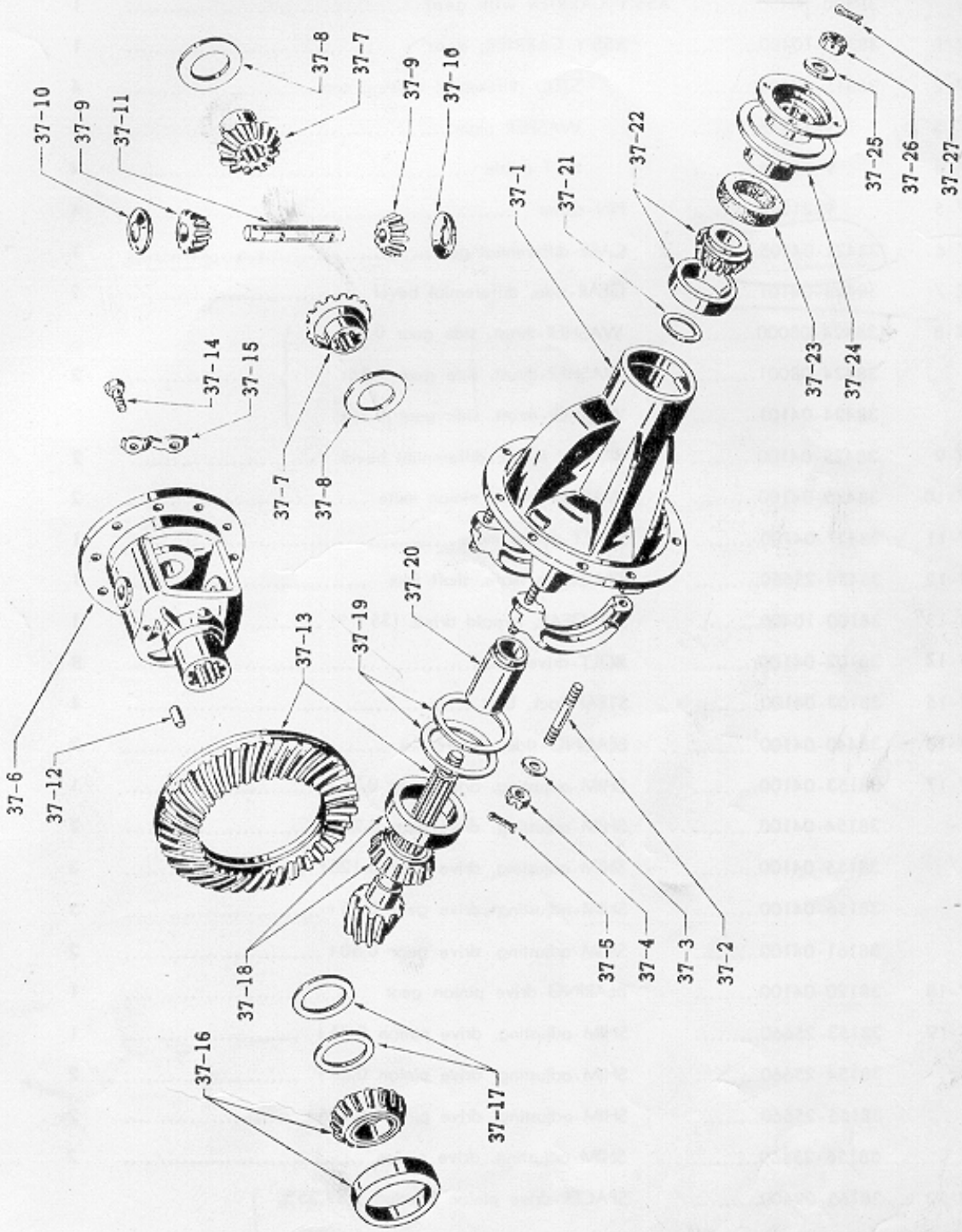

Please note; The ASSY-Carrier with gear is available now is for A(W)pL410. Two modifications to use it are Listed Below.

NISSAN MOTOR CO., LTD.

ILL. NO.	PART NO.	PART NAME	Q'TY PER SECTION SP310	Q'TY PER SECTION SPL310
		DIFFERENTIAL ASS'Y must be used with 2-38423-04101 side gear		
	38300-12400	ASS'Y-CARRIER with gear	1	1
37-1	38310-10400	ASS'Y-CARRIER, gear	1	1
37-2	38315-04100	STUD-differential bearing cap	4	4
37-3	9-15416	WASHER-plain	4	4
37-4	9-11846	NUT-castle	4	4
37-5	9-21218	PIN-cotter	4	4
37-6	38421-04105	CASE-differential gear	1	1
37-7	38423-04101	GEAR-side, differential bevel	2	2
37-8	38424-08000	WASHER-thrust, side gear 0.83t		
	38424-08001	WASHER-thrust, side gear 0.88t	2	2
	38424-04101	WASHER-thrust, side gear 0.79t		
37-9	38425-04100	PINION MATE-differential bevel	2	2
37-10	38426-04100	WASHER-thrust, pinion mate	2	2
37-11	38427-04100	SHAFT-pinion mate	1	1
37-12	38428-25660	PIN-pinion mate, shaft lock	1	1
37-13	38100-10400	SET-GEAR, hypoid drive, (35 : 9)	1	1
37-14	38102-04100	BOLT-drive gear	8	8
37-15	38103-04100	STRAP-lock, bolt	4	4
37-16	38440-04100	BEARING-side, differential	2	2
37-17	38153-04100	SHIM-adjusting, drive gear 0.75 t	1	1
	38154-04100	SHIM-adjusting, drive gear 0.25 t	2	2
	38155-04100	SHIM-adjusting, drive gear 0.125t	3	3
	38156-04100	SHIM-adjusting, drive gear 0.75 t	3	3
	38161-04100	SHIM-adjusting, drive gear 0.50 t	2	2
37-18	38120-04100	BEARING-drive pinion gear	1	1
37-19	38153-25660	SHIM-adjusting, drive pinion 0.75 t	1	1
	38154-25660	SHIM-adjusting, drive pinion 0.25 t	2	2
	38155-25660	SHIM-adjusting, drive pinion 0.125 t	2	2
	38156-25660	SHIM-adjusting, drive pinion	2	2
37-20	38165-09400	SPACER-drive pinion bearing 59.25mm		
	38166-09400	SPACER-drive pinion bearing 59.50mm	1	1
	38167-09400	SPACER-drive pinion bearing 59.75mm		

ILL. NO.	PART NO.	PART NAME	Q'TY PER SECTION SP310	Q'TY PER SECTION SPL310
37-21	38127-09400	WASHER-adjusting, drive pinion bearing 2.59t	1	1
	38128-09400	WASHER-adjusting, drive pinion bearing 2.57t		
	38129-09400	WASHER-adjusting, drive pinion bearing 2.55t		
	38130-09400	WASHER-adjusting, drive pinion bearing 2.53t		
	38131-09400	WASHER-adjusting, drive pinion bearing 2.51t		
	38132-09400	WASHER-adjusting, drive pinion bearing 2.49t		
	38133-09400	WASHER-adjusting, drive pinion cearing 2.47t		
	38134-09400	WASHER-adjusting, drive pinion bearing 2.45t		
	38135-09400	WASHER-adjusting, drive pinion bearing 2.43t		
	38136-09400	WASHER-adjusting, drive pinion bearing 2.41t		
	38137-09400	WASHER-adjusting, drive pinion bearing 2.39t		
	38138-09400	WASHER-adjusting, drive pinion bearing 2.37t		
	38139-09400	WASHER-adjusting, drive pinion bearing 2.35t		
	38140-09400	WASHER-adjusting, drive pinion bearing 2.33t		
	38141-09400	WASHER-adjusting, drive pinion bearing 2.31t		
37-22	38140-04100	BEARING-drive pinion, front	1	1
37-23	38189-02701	SEAL-oil drive pinion	1	1
37-24	38210-09400	ASS'Y-FLANGE, companion	1	1
37-25	38215-01300	WASHER-plain	1	1
37-26	38216-01300	NUT-castle	1	1
37-27	9-21430	PIN-cotter	1	1
37-28	38320-04100	GASKET-gear carrier	1	1
37-29	9-11145	NUT-plain	8	8
37-30	9-15115	WASHER-lock	8	8

REAR AXLE CASE & SHAFT

37-31	43010-10400	**COMPLETE-CASE, rear axle**	1	1
37-32	43067-30000	STUD-gear carrier	8	8
37-33	43027-04100	ASS'Y-PLUG, drain	1	1
37-34	9-32112	PLUG-taper	1	1
37-35	38322-55100	ASS'Y-BREATHER	1	1
37-36	42068-04101	SPACER-oil seal, rear axle	1	1

ILL. NO.	PART NO.	PART NAME	Q'TY PER SECTION SP310	Q'TY PER SECTION SPL310
37-37	38212-04101	SEAL-oil, rear axle shaft	2	2
37-38	38164-08000	SHAFT-rear axle	2	2
37-39	43070-04101	SPACER-rear axle bearing	2	2
37-40	43215-08000	BEARING-rear axle	2	2
37-41	43069-04101	WASHER-lock, rear axle bearing	2	2
37-42	43084-04101	NUT-lock, rear axle bearing	2	2
37-43	43036-04100	SHIM-rear exle case end 0.75t or 0.8t.	0~4	0~4
37-44	43239-04100	PACKING-grease clutch (vellumoid)	2	2
37-45	43234-04101	ASS'Y-CATCHER, grease rear axle bearing R.H.	1	1
	43235-04101	ASS'Y-CATCHER, grease rear axle bearing L.H.	1	1
37-46	43223-04101	SEAL-grease, rear axle bearing	2	2
	43233-04100	PLATE-locking, brake disc fixing bolt	4	4
	43083-04101	BOLT-fixing, rear brake disc	8	8
37-49	9-12445-1	NUT	8	8

REAR HUB & DRUM

37-50	40221-04101	BOLT-hub, road wheel	8	8
37-51	○ 40206-10500	DRUM-brake	2	2
37-52	3-24412-1	SCREW	4	4

ILL. NO.	PART NO.	PART NAME	Q'TY PER SECTION SP310	Q'TY PER SECTION SPL310
37-21	38127-09400	WASHER-adjusting, drive pinion bearing 2.59t		
	38128-09400	WASHER-adjusting, drive pinion bearing 2.57t		
	38129-09400	WASHER-adjusting, drive pinion bearing 2.55t		
	38130-09400	WASHER-adjusting, drive pinion bearing 2.53t		
	38131-09400	WASHER-adjusting, drive pinion bearing 2.51t		
	38132-09400	WASHER-adjusting, drive pinion bearing 2.49t		
	38133-09400	WASHER-adjusting, drive pinion cearing 2.47t		
	38134-09400	WASHER-adjusting, drive pinion bearing 2.45t	1	1
	38135-09400	WASHER-adjusting, drive pinion bearing 2.43t		
	38136-09400	WASHER-adjusting, drive pinion bearing 2.41t		
	38137-09400	WASHER-adjusting, drive pinion bearing 2.39t		
	38138-09400	WASHER-adjusting, drive pinion bearing 2.37t		
	38139-09400	WASHER-adjusting, drive pinion bearing 2.35t		
	38140-09400	WASHER-adjusting, drive pinion bearing 2.33t		
	38141-09400	WASHER-adjusting, drive pinion bearing 2.31t		
37-22	38140-04100	BEARING-drive pinion, front	1	1
37-23	38189-02701	SEAL-oil drive pinion	1	1
37-24	38210-09400	ASS'Y-FLANGE, companion	1	1
37-25	38215-01300	WASHER-plain	1	1
37-26	38216-01300	NUT-castle	1	1
37-27	9-21430	PIN-cotter	1	1
37-28	38320-04100	GASKET-gear carrier	1	1
37-29	9-11145	NUT-plain	8	8
37-30	9-15115	WASHER-lock	8	8

REAR AXLE CASE & SHAFT

37-31	43010-10400	**COMPLETE-CASE, rear axle**	1	1
37-32	43067-30000	STUD-gear carrier	8	8
37-33	43027-04100	ASS'Y-PLUG, drain	1	1
37-34	9-32112	PLUG-taper	1	1
37-35	38322-55100	ASS'Y-BREATHER	1	1
37-36	42068-04101	SPACER-oil seal, rear axle	1	1

ILL. NO.	PART NO.	PART NAME	Q'TY PER SECTION SP310	Q'TY PER SECTION SPL310
37-37	38212-04101	SEAL-oil, rear axle shaft	2	2
37-38	38164-08000	SHAFT-rear axle	2	2
37-39	43070-04101	SPACER-rear axle bearing	2	2
37-40	43215-08000	BEARING-rear axle	2	2
37-41	43069-04101	WASHER-lock, rear axle bearing	2	2
37-42	43084-04101	NUT-lock, rear axle bearing	2	2
37-43	43036-04100	SHIM-rear exle case end 0.75t or 0.8t.	0~4	0~4
37-44	43239-04100	PACKING-grease clutch (vellumoid)	2	2
37-45	43234-04101	ASS'Y-CATCHER, grease rear axle bearing R.H.	1	1
	43235-04101	ASS'Y-CATCHER, grease rear axle bearing L.H.	1	1
37-46	43223-04101	SEAL-grease, rear axle bearing	2	2
	43233-04100	PLATE-locking, brake disc fixing bolt	4	4
	43083-04101	BOLT-fixing, rear brake disc	8	8
37-49	9-12445-1	NUT	8	8

REAR HUB & DRUM

37-50	40221-04101	BOLT-hub, road wheel	8	8
37-51	○ 40206-10500	DRUM-brake	2	2
37-52	3-24412-1	SCREW	4	4

ILL. NO.	PART NO.	PART NAME	Q'TY PER SECTION SP310	Q'TY PER SECTION SPL310
37-21	38127-09400	WASHER-adjusting, drive pinion bearing 2.59t	1	1
	38128-09400	WASHER-adjusting, drive pinion bearing 2.57t		
	38129-09400	WASHER-adjusting, drive pinion bearing 2.55t		
	38130-09400	WASHER-adjusting, drive pinion bearing 2.53t		
	38131-09400	WASHER-adjusting, drive pinion bearing 2.51t		
	38132-09400	WASHER-adjusting, drive pinion bearing 2.49t		
	38133-09400	WASHER-adjusting, drive pinion cearing 2.47t		
	38134-09400	WASHER-adjusting, drive pinion bearing 2.45t		
	38135-09400	WASHER-adjusting, drive pinion bearing 2.43t		
	38136-09400	WASHER-adjusting, drive pinion bearing 2.41t		
	38137-09400	WASHER-adjusting, drive pinion bearing 2.39t		
	38138-09400	WASHER-adjusting, drive pinion bearing 2.37t		
	38139-09400	WASHER-adjusting, drive pinion bearing 2.35t		
	38140-09400	WASHER-adjusting, drive pinion bearing 2.33t		
	38141-09400	WASHER-adjusting, drive pinion bearing 2.31t		
37-22	38140-04100	BEARING-drive pinion, front	1	1
37-23	38189-02701	SEAL-oil drive pinion	1	1
37-24	38210-09400	ASS'Y-FLANGE, companion	1	1
37-25	38215-01300	WASHER-plain	1	1
37-26	38216-01300	NUT-castle	1	1
37-27	9-21430	PIN-cotter	1	1
37-28	38320-04100	GASKET-gear carrier	1	1
37-29	9-11145	NUT-plain	8	8
37-30	9-15115	WASHER-lock	8	8

REAR AXLE CASE & SHAFT

37-31	43010-10400	COMPLETE-CASE, rear axle	1	1
37-32	43067-30000	STUD-gear carrier	8	8
37-33	43027-04100	ASS'Y-PLUG, drain	1	1
37-34	9-32112	PLUG-taper	1	1
37-35	38322-55100	ASS'Y-BREATHER	1	1
37-36	42068-04101	SPACER-oil seal, rear axle	1	1

ILL. NO.	PART NO.	PART NAME	Q'TY PER SECTION SP310	Q'TY PER SECTION SPL310
37-37	38212-04101	SEAL-oil, rear axle shaft	2	2
37-38	38164-08000	SHAFT-rear axle	2	2
37-39	43070-04101	SPACER-rear axle bearing	2	2
37-40	43215-08000	BEARING-rear axle	2	2
37-41	43069-04101	WASHER-lock, rear axle bearing	2	2
37-42	43084-04101	NUT-lock, rear axle bearing	2	2
37-43	43036-04100	SHIM-rear exle case end 0.75t or 0.8t.	0~4	0~4
37-44	43239-04100	PACKING-grease clutch (vellumoid)	2	2
37-45	43234-04101	ASS'Y-CATCHER, grease rear axle bearing R.H.	1	1
	43235-04101	ASS'Y-CATCHER, grease rear axle bearing L.H.	1	1
37-46	43223-04101	SEAL-grease, rear axle bearing	2	2
	43233-04100	PLATE-locking, brake disc fixing bolt	4	4
	43083-04101	BOLT-fixing, rear brake disc	8	8
37-49	9-12445-1	NUT	8	8

REAR HUB & DRUM

37-50	40221-04101	BOLT-hub, road wheel	8	8
37-51	○ 40206-10500	DRUM-brake	2	2
37-52	3-24412-1	SCREW	4	4

44000-10600	REAR BRAKE	Fig. 38

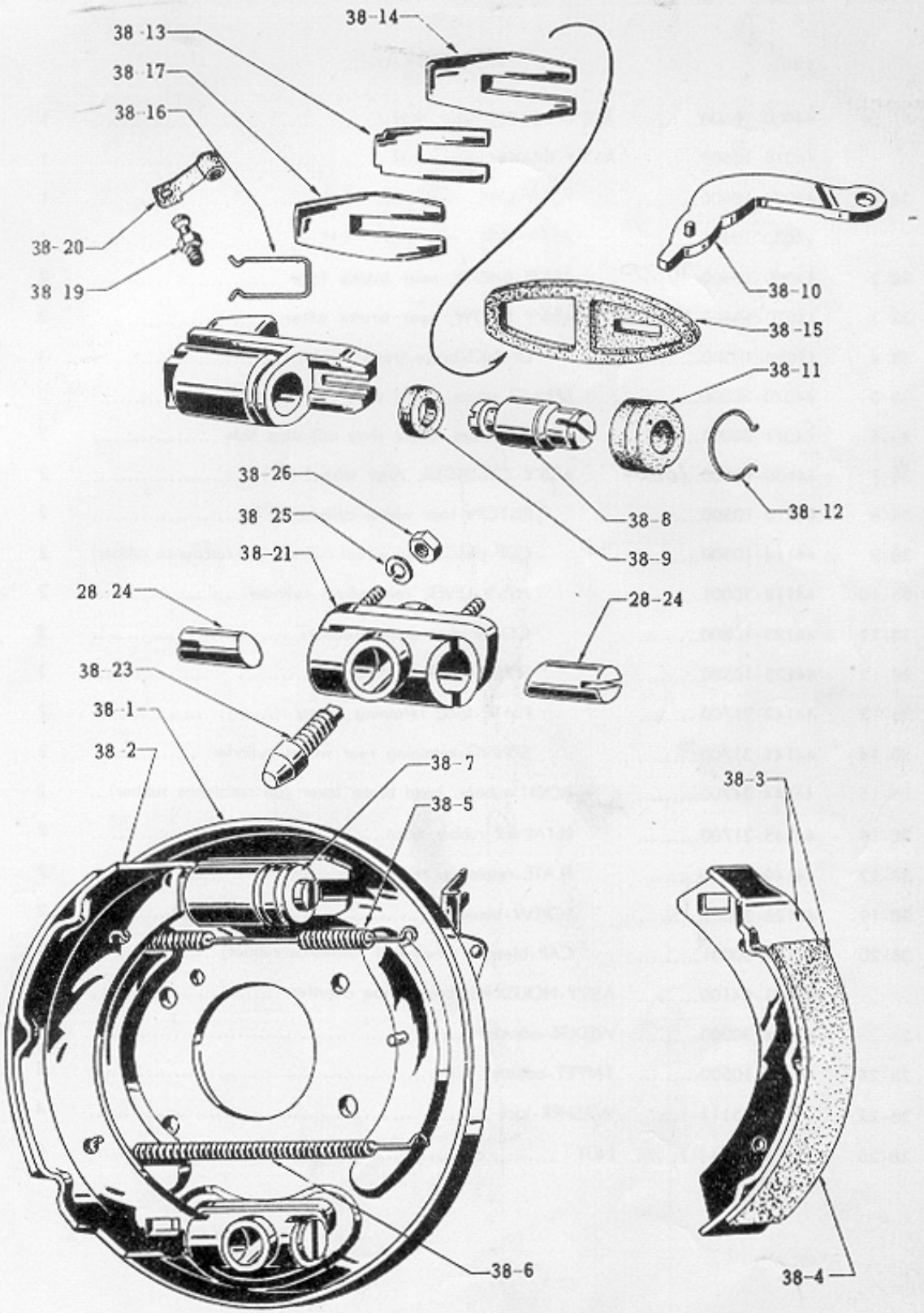

ILL. NO.	PART NO.	PART NAME	Q'TY PER SECTION SP310	Q'TY PER SECTION SPL310

REAR BRAKE

	○ 44000-10600.....	ASS'Y-BRAKE, rear R.H.	1	1
	○ 44010-10600.....	ASS'Y-BRAKE, rear L.H.	1	1
38-1	○ 44020-10600.....	ASS'Y-DISC, rear brake R.H.	1	1
	○ 44030-10600.....	ASS'Y-DISC, rear brake L.H.	1	1
38-2	○ 44060-~~19500~~ 16500	ASS'Y-SHOW, rear brake fore	2	2
38-3	○ 44070-~~10500~~ 16506	ASS'Y-SHOW, rear brake after	2	2

46010-07400 BRAKE MASTER CYLINDER Fig. 39

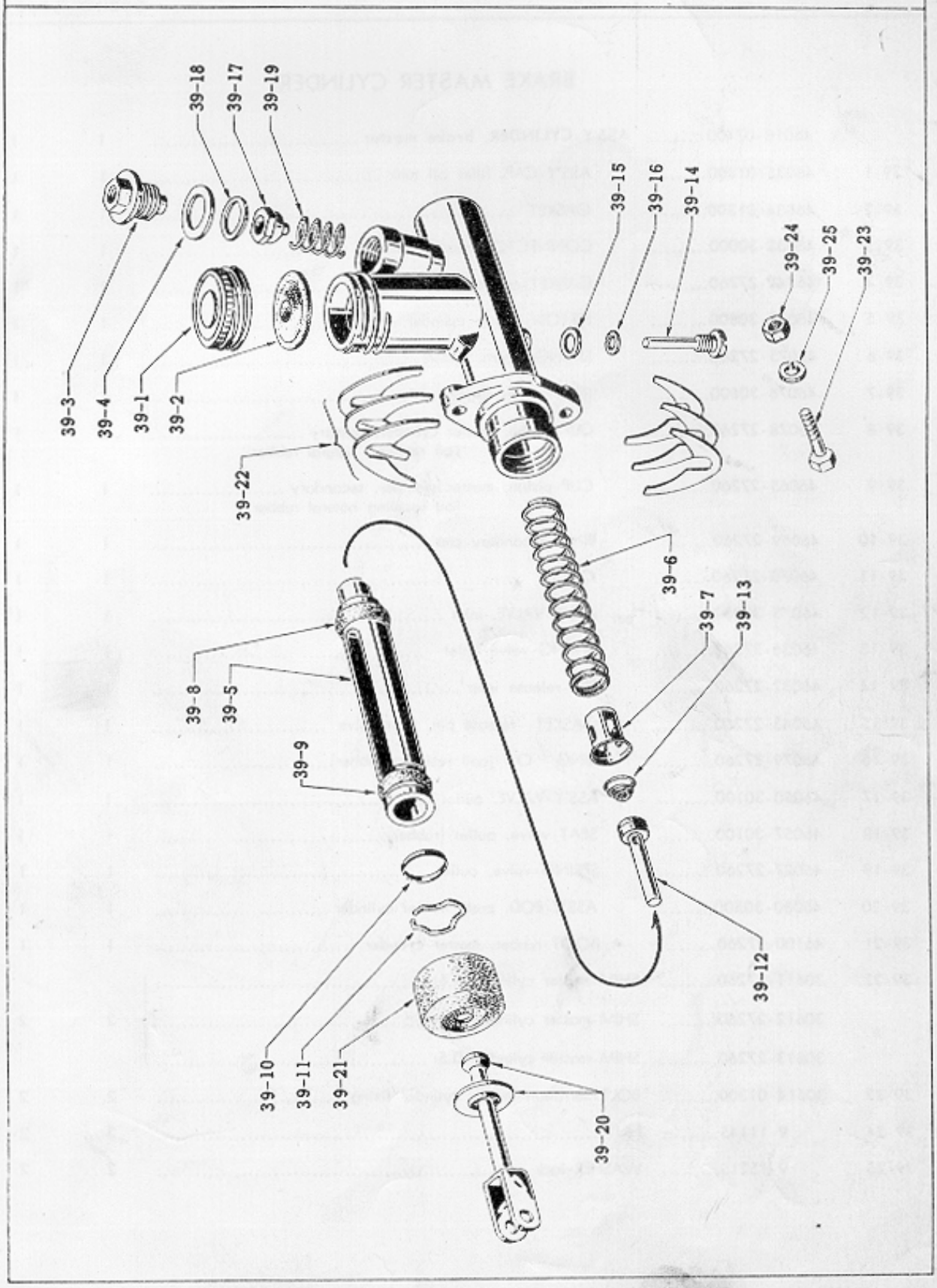

BRAKE MASTER CYLINDER

ILL. NO.	PART NO.	PART NAME	Q'TY PER SECTION SP310	SPL310
	46010-07400	ASS'Y-CYLINDER, brake master	1	1
39-1	46035-01300	ASS'Y-CAP, filler oil tank	1	1
39-2	46034-01300	GASKET	1	1
39-3	46038-30000	CONNECTOR-master cylinder, brake	1	1
39-4	46042-27260	GASKET-connector, outer	1	1
39-5	46063-30800	PISTON-master cylinder, brake	1	1
39-6	46075-27260	SPRING-return, piston	1	1
39-7	46076-30800	SEAT-return spring, piston	1	1
39-8	46078-27260	CUP-piston, master cylinder, primary (oil resisting natural rubber)	1	1
39-9	46065-27260	CUP-piston, master cylinder, secondary (oil resisting natural rubber)	1	1
39-10	46069-27260	RING-secondary cup	1	1
39-11	46070-27260	CIRCLIP	1	1
39-12	46073-30800	ASS'Y-VALVE, inlet	1	1
39-13	46056-27260	SPRING-valve, inlet	1	1
39-14	46032-27260	PIN-release inlet	1	1
39-15	46043-27260	GASKET--release pin, inlet valve	1	1
39-16	46079-27260	RING-" O " (oil resisting rubber)	1	1
39-17	46050-30100	ASS'Y-VALVE, outlet	1	1
39-18	46057-30100	SEAT-valve, outlet (rubber)	1	1
39-19	46027-27260	SPRING-valve, outlet	1	1
39-20	46080-30500	ASS'Y-ROD, push, master cylinder	1	1
39-21	46100-27260	BOOT-rubber, master cylinder	1	1
39-22	30611-27260	SHIM-master cylinder 1.6t	2	2
	30612-27260	SHIM-master cylinder 0.8t		
	30613-27260	SHIM-master cylinder 0.5t		
39-23	30614-01300	BOLT-serration master cylinder fixing	2	2
39-24	9-11145	NUT	2	2
39-25	9-15215	WASHER-lock	2	2

46010-07400 BRAKE MASTER CYLINDER Fig. 39

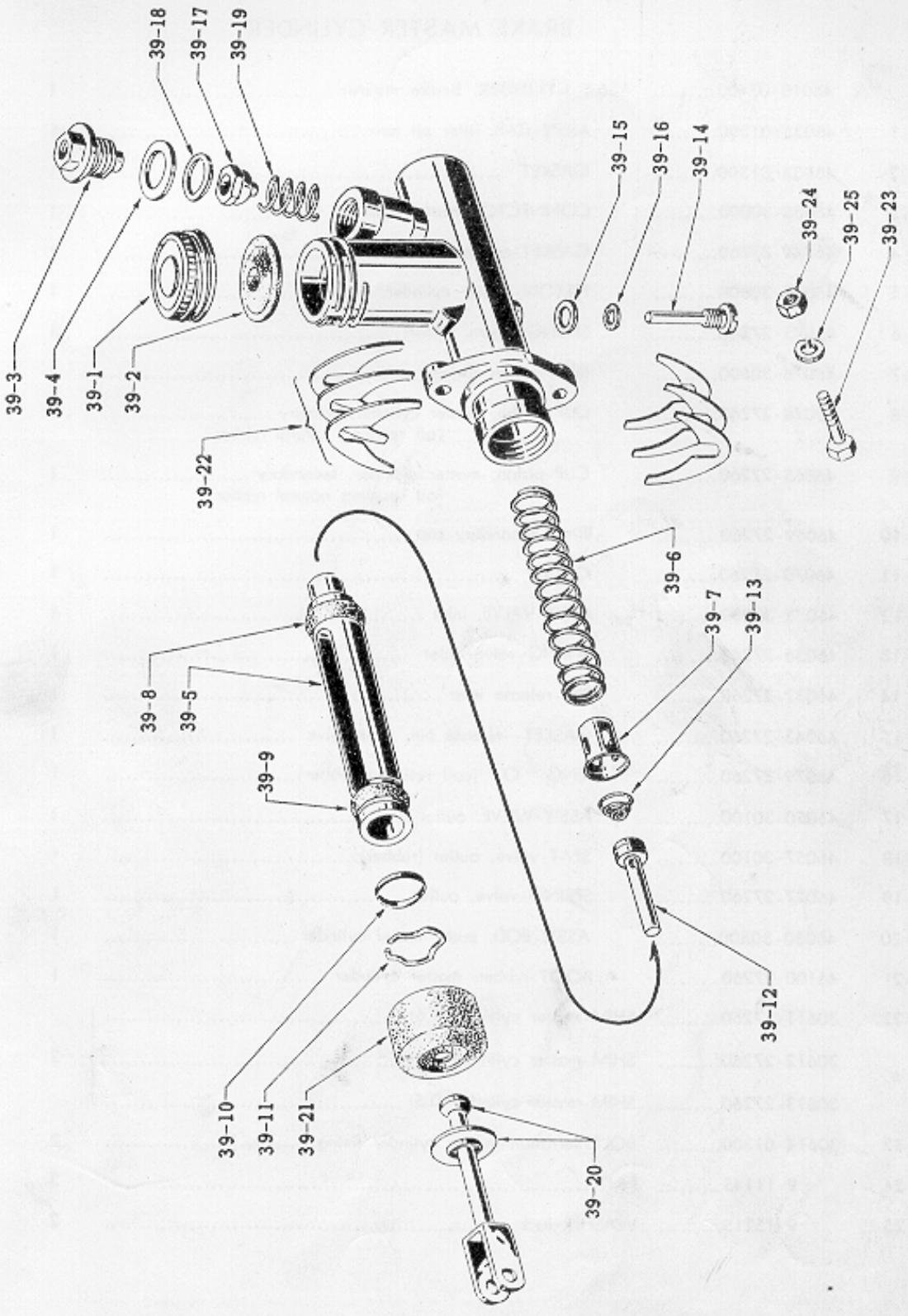

BRAKE MASTER CYLINDER

ILL. NO.	PART NO.	PART NAME	Q'TY PER SECTION SP310	Q'TY PER SECTION SPL310
	46010-07400	**ASS'Y-CYLINDER, brake master**	1	1
39-1	46035-01300	ASS'Y-CAP, filler oil tank	1	1
39-2	46034-01300	GASKET	1	1
39-3	46038-30000	CONNECTOR-master cylinder, brake	1	1
39-4	46042-27260	GASKET-connector, outer	1	1
39-5	46063-30800	PISTON-master cylinder, brake	1	1
39-6	46075-27260	SPRING-return, piston	1	1
39-7	46076-30800	SEAT-return spring, piston	1	1
39-8	46078-27260	CUP-piston, master cylinder, primary (oil resisting natural rubber)	1	1
39-9	46065-27260	CUP-piston, master cylinder, secondary (oil resisting natural rubber)	1	1
39-10	46069-27260	RING-secondary cup	1	1
39-11	46070-27260	CIRCLIP	1	1
39-12	46073-30800	ASS'Y-VALVE, inlet	1	1
39-13	46056-27260	SPRING-valve, inlet	1	1
39-14	46032-27260	PIN-release inlet	1	1
39-15	46043-27260	GASKET--release pin, inlet valve	1	1
39-16	46079-27260	RING-"O" (coil resisting rubber)	1	1
39-17	46050-30100	ASS'Y-VALVE, outlet	1	1
39-18	46057-30100	SEAT-valve, outlet (rubber)	1	1
39-19	46027-27260	SPRING-valve, outlet	1	1
39-20	46080-30500	ASS'Y-ROD, push, master cylinder	1	1
39-21	46100-27260	BOOT-rubber, master cylinder	1	1
39-22	30611-27260	SHIM-master cylinder 1.6t	2	2
	30612-27260	SHIM-master cylinder 0.8t		
	30613-27260	SHIM-master cylinder 0.5t		
39-23	30614-01300	BOLT-serration master cylinder fixing	2	2
39-24	9-11145	NUT	2	2
39-25	9-15215	WASHER-lock	2	2

46010-07400 BRAKE MASTER CYLINDER Fig. 39

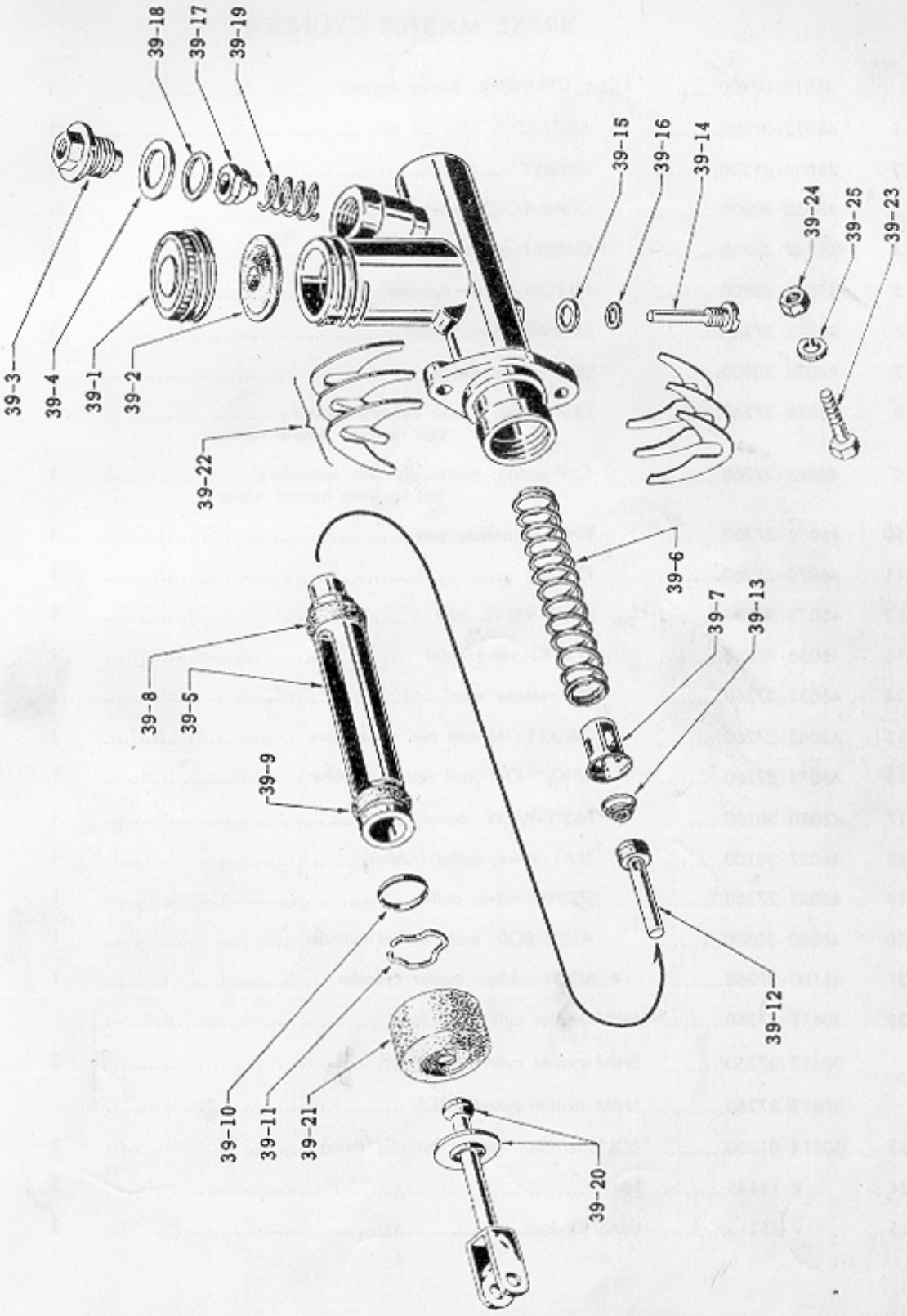

BRAKE MASTER CYLINDER

ILL. NO.	PART NO.	PART NAME	Q'TY PER SECTION SP310	Q'TY PER SECTION SPL310
	46010-07400	**ASS'Y-CYLINDER, brake master**	1	1
39-1	46035-01300	ASS'Y-CAP, filler oil tank	1	1
39-2	46034-01300	GASKET	1	1
39-3	46038-30000	CONNECTOR-master cylinder, brake	1	1
39-4	46042-27260	GASKET-connector, outer	1	1
39-5	46053-30800	PISTON-master cylinder, brake	1	1
39-6	46075-27260	SPRING-return, piston	1	1
39-7	46076-30800	SEAT-return spring, piston	1	1
39-8	46078-27260	CUP-piston, master cylinder, primary (oil resisting natural rubber)	1	1
39-9	46065-27260	CUP-piston, master cylinder, secondary (oil resisting natural rubber)	1	1
39-10	46069-27260	RING-secondary cup	1	1
39-11	46070-27260	CIRCLIP	1	1
39-12	46073-30800	ASS'Y-VALVE, inlet	1	1
39-13	46056-27260	SPRING-valve, inlet	1	1
39-14	46032-27260	PIN-release inler	1	1
39-15	46043-27260	GASKET--release pin, inlet valve	1	1
39-16	46079-27260	RING-"O" (coil resisting rubber)	1	1
39-17	46050-30100	ASS'Y-VALVE, outlet	1	1
39-18	46057-30100	SEAT-valve, outlet (rubber)	1	1
39-19	46027-27260	SPRING-valve, outlet	1	1
39-20	46080-30500	ASS'Y-ROD, push, master cylinder	1	1
39-21	46100-27260	BOOT-rubber, master cylinder	1	1
39-22	30611-27260	SHIM-master cylinder 1.6t	2	2
	30612-27260	SHIM-master cylinder 0.8t		
	30613-27260	SHIM-master cylinder 0.5t		
39-23	30614-01300	BOLT-serration master cylinder fixing	2	2
39-24	9-11145	NUT	2	2
39-25	9-15215	WASHER-lock	2	2

BRAKE PIPING

Fig. 40

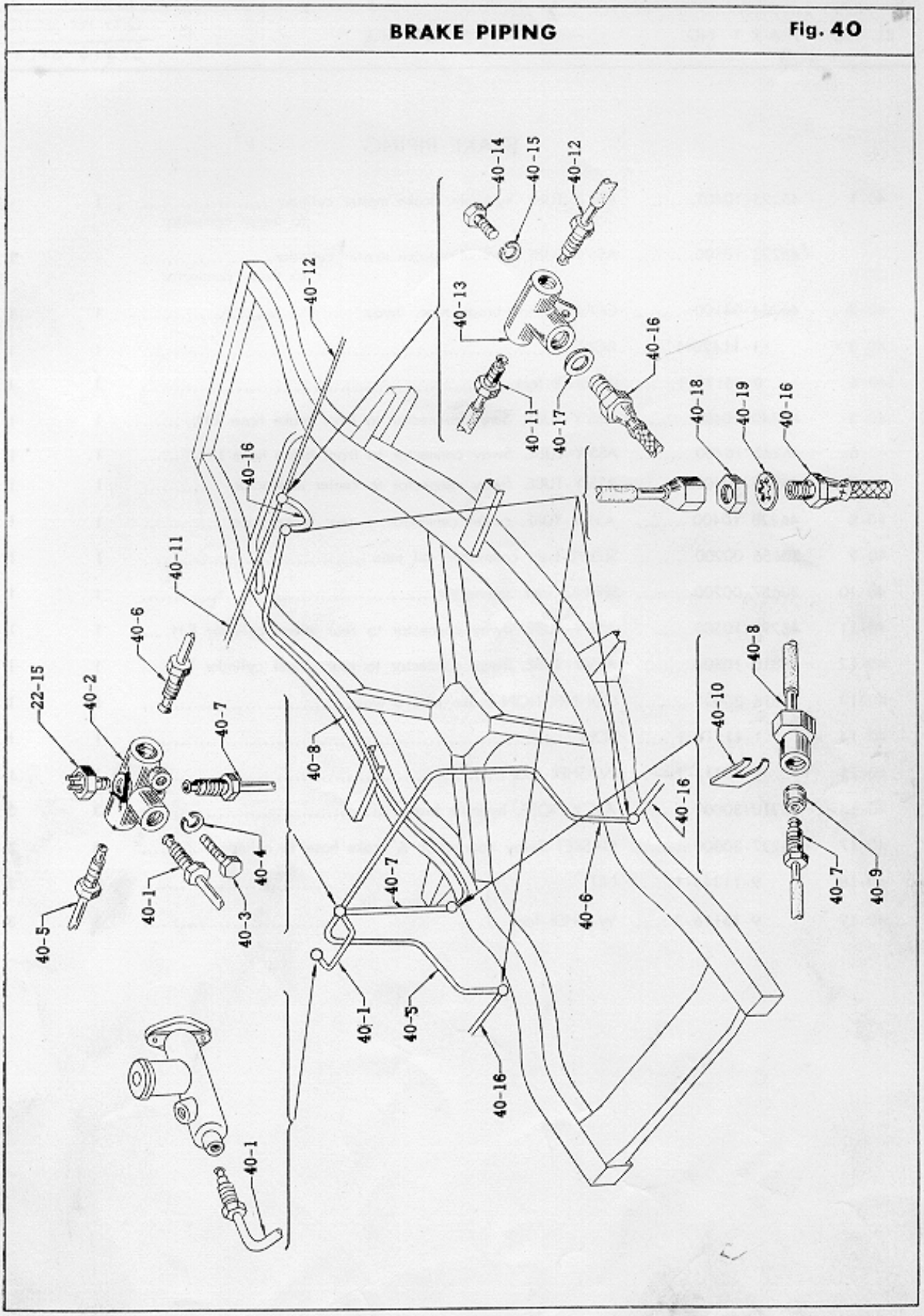

ILL. NO.	PART NO.	PART NAME	Q'TY PER SECTION SP310	Q'TY PER SECTION SPL310
40-1	◦ 46223-10401	ASS'Y-TUBE, hydraulic brake master cylinder to 5way connector	1	-
	◦ 46223-10500	ASS'Y-TUBE, hydraulic brake master cylinder to 5way connector	-	1
40-2	46234-04100	CONNECTOR-brade tube, 5way	1	1
40-3	1-11420-1	BOLT	1	1
40-4	9-15114-1	WASHER-lock	1	1
40-5	◦ 46240-10400	ASS'Y-TUBE, 5way connector to front brake hose R.H.	1	1
40-6	◦ 46242-10400	ASS'Y-TUBE, 5way connector to front brake hose L.H.	1	1
40-7	◦ 46229-10400	ASS'Y-TUBE, 5way connector to center connector	1	1
40-8	◦ 46228 10400	ASS'Y-TUBE, center cennector to rear brake hose	1	1
40-9	30656 00200	SLEEVE ball, connector, oil tube	1	1
40-10	30657-00200	SPRING-lock, connector	1	1
40-11	46290-10500	ASS'Y-TUBE, 3way connector to rear wheel cylinder R.H.	1	1
40-12	◦ 46310-10500	ASS'Y-TUBE, 3way connector to rear wheel cylinder L.H.	1	1
40-13	46316 30001	CONNECTION-brake tube 3 way	1	1
40-14	1-11516-1	BOLT	1	1
40-15	9-15115-1	WASHER-lock	1	1
40-16	46210-30001	ASS'Y-HOSE, hydrulic brake	3	3
40-17	46237-30000	GASKET-3way connection & brake hose to cylinder	3	3
40-18	9-11346-1	NUT } brake hose fix	3	3
40-19	9-16116-3	WASHER-lock } brake hose fix	3	3

BRAKE PIPING

30610-30001 CLUTCH MASTER CYLINDER Fig.41

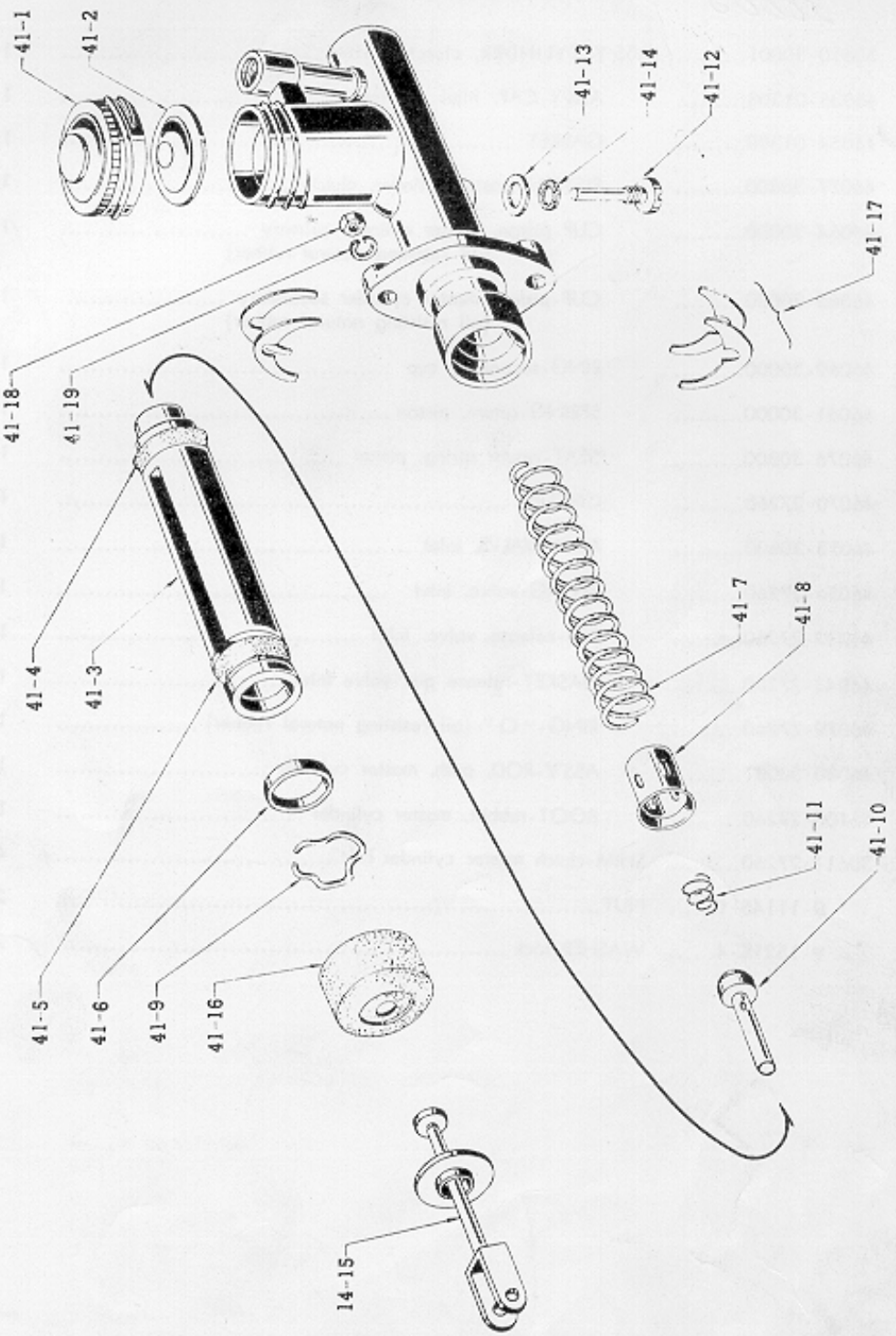

R. Kit 30615 30002

CLUTCH MASTER CYLINDER

ILL. NO.	PART NO.	PART NAME	Q'TY PER SECTION SP310	Q'TY PER SECTION SPL310
	30610-30001	**ASS'Y-CYLINDER, clutch master**	1	1
41-1	46035-01300	ASS'Y-CAP, filler, oil tank	1	1
41-2	46034-01300	GASKET	1	1
41-3	46077-30800	PISTON-master cylinder, clutch	1	1
41-4	46064-30000	CUP-piston, master cylinder primary (oil resisting natural rubber)	1	1
41-5	46065-30000	CUP-piston, master cylinder secondary (oil resisting natural rubber)	1	1
41-6	46069-30000	RING-secondary cup	1	1
41-7	46061-30000	SPRING-return, piston	1	1
41-8	46076-30800	SEAT-return spring, piston	1	1
41-9	46070-27260	CIRCLIP	1	1
41-10	46073-30800	ASS'Y-VALVE, inlet	1	1
41-11	46056-27260	SPRING-valve, inlet	1	1
41-12	46032-27260	PIN-release, valve, inlet	1	1
41-13	46043-27260	GASKET-release pin, valve inlet	1	1
41-14	46079-27260	RING-" O " (oil resisting natural rubber)	1	1
41-15	46080-30001	ASS'Y-ROD, push, master cylinder	1	1
41-16	46100-27260	BOOT-rubber, master cylinder	1	1
41-17	30611-27260	SHIM-clutch master cylinder 1.6t	4	4
41-18	9-11145-1	NUT	2	2
41-19	9-15215-4	WASHER-lock	2	2

CLUTCH OPERATING CYLINDER — Fig. 42

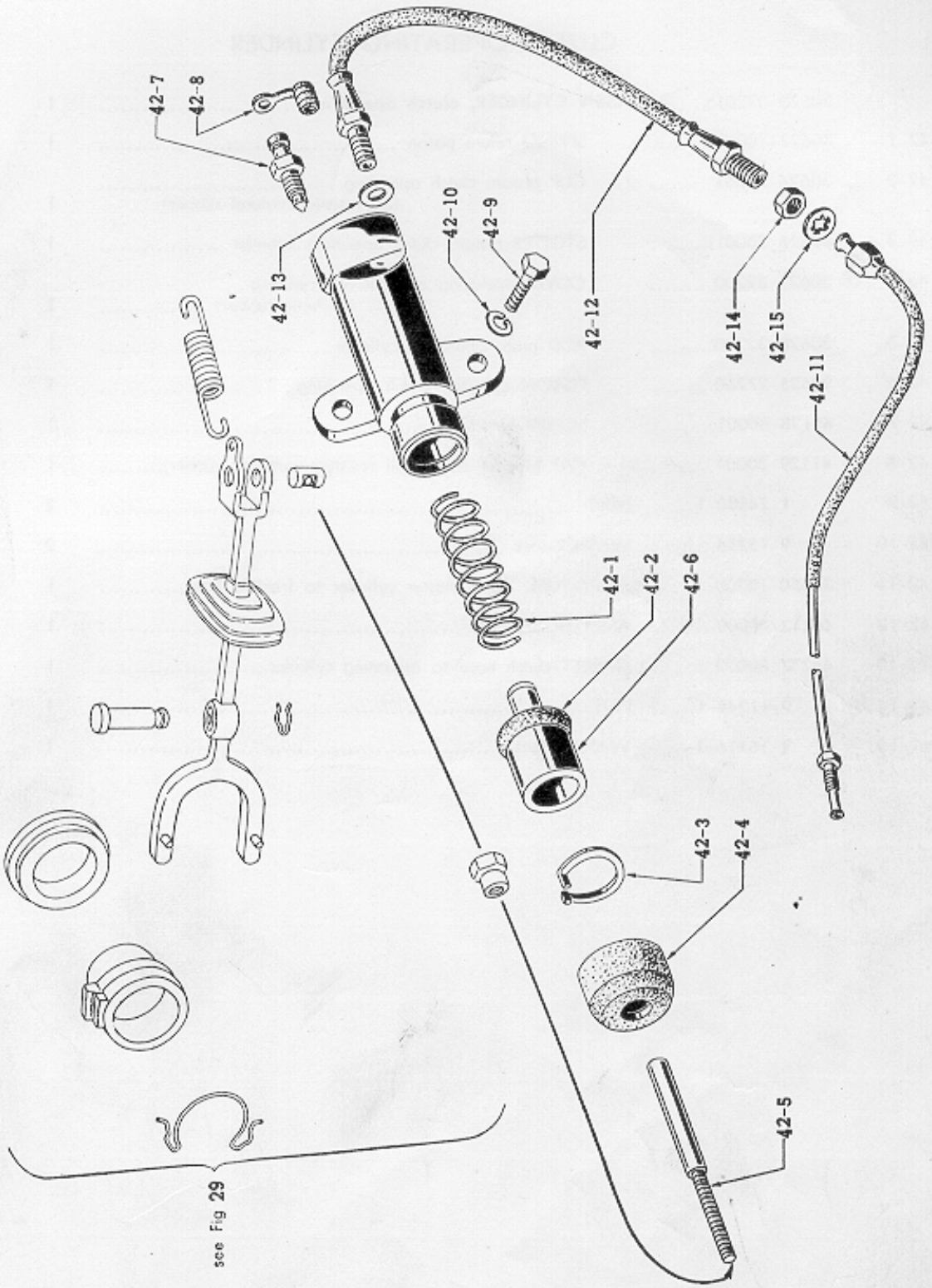

ILL. NO.	PART NO.	PART NAME	Q'TY PER SECTION SP310	Q'TY PER SECTION SPL310

CLUTCH OPERATING CYLINDER

	30620-32201	**ASS'Y-CYLINDER, clutch operating**	1	1
42-1	30622-30001	SPRING-return piston	1	1
42-2	30624-30001	CUP-piston, clutch operating (oil resisting natural rubber)	1	1
42-3	30626-30001	STOPPER-piston, clutch operating cylinder	1	1
42-4	30627-32200	COVER-operating cylinder (oil resisting synthetic rubber)	1	1
42-5	30628-32200	ROD-push, operating cylinder	1	1
42-6	30625-27260	PISTON-cylinder, clutch operating	1	1
42-7	41128-30001	SCREW-bleeder	1	1
42-8	41129-30001	CAP-bleeder screw (oil resisting synthetic rubber)	1	1
42-9	1-24630-1	BOLT	2	2
42-10	9-15216	WASHER-lock	2	2
42-11	30650-10500	ASS'Y-TUBE, clutch master cylinder to frexible hose	1	1
42-12	46212-30000	ASS'Y-HOSE, clutch	1	1
42-13	46237-30000	GASKET-clutch hose to operating cylinder	1	1
42-14	9-11346-1	NUT	1	1
42-15	9-16116-1	WASHER-lock	1	1

BRAKE & CLUTCH PEDAL

Fig. 43

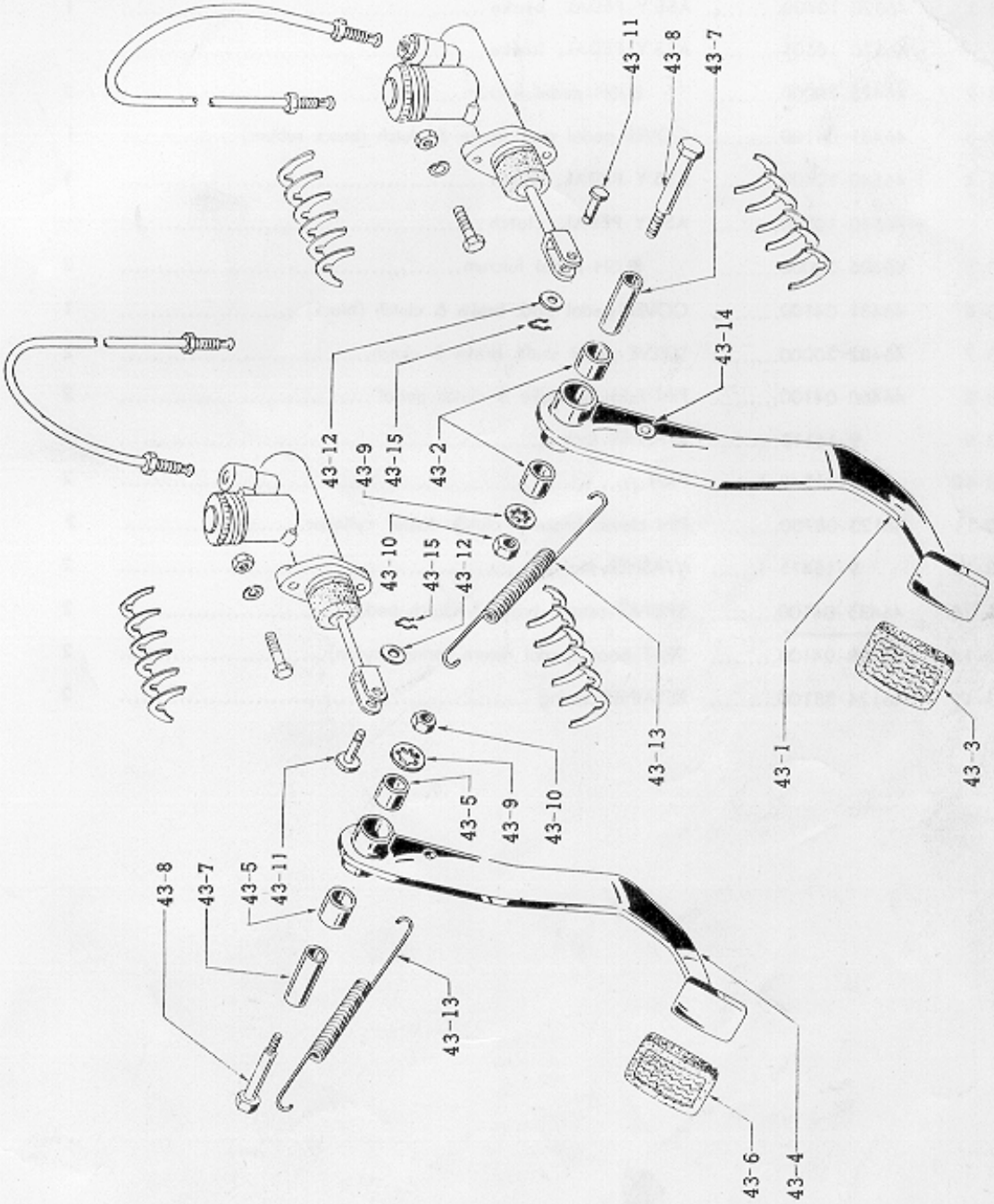

ILL. NO.	PART NO.	PART NAME	Q'TY PER SECTION SP310	Q'TY PER SECTION SPL310

BRAKE & CLUTCH PEDAL

43-1	○ 46520-10400	ASS'Y-PEDAL, brake	1	-
	○ 46520-10501	ASS'Y-PEDAL, brake	-	1
43-2	46425-30000	BUSH-pedal fulcrum	2	2
43-3	46431-04100	COVER-pedal pad, brake & clutch (brack rubber)	1	1
43-4	○ 46540-10400	ASS'Y-PEDAL, clutch	1	-
	○ 46540-10500	ASS'Y-PEDAL, clutch	-	1
43-5	46425-30000	BUSH-pedal fulcrum	2	2
43-6	46431-04100	COVER-pedal pad, brake & clutch (black)	1	1
43-7	46482-30000	SLEEVE-pedal shaft, brake & clutch	2	2
43-8	46460-04100	PIN-fulcrum, brake & clutch pedal	2	2
43-9	9-16118	WASHER-lock	2	2
43-10	9-11348-1	NUT	2	2
43-11	46123-08700	PIN-clevis, brake & clutch master cylinder	2	2
43-12	9-15415-1	WASHER-plain	2	2
43-13	46485-04100	SPRING-return, brake & clutch pedal	2	2
43-14	46488-04100	SEAT-hook, pedal return spring (nylon)	2	2
43-15	46124-35100	RETAINER-spring	2	2

STEERING GEAR Fig.44

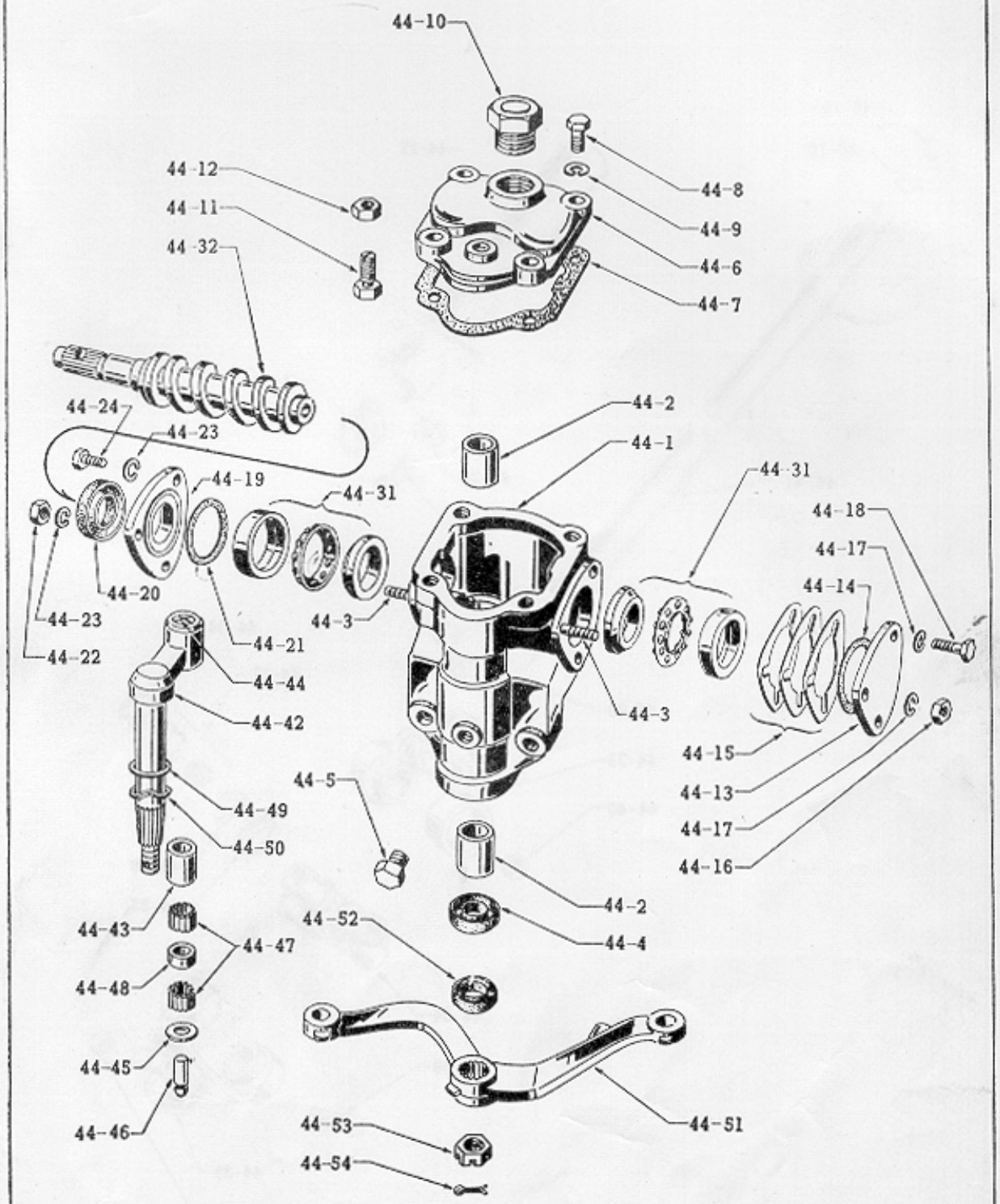

STEERING COLUMN & COUPLING

Fig. 44-A

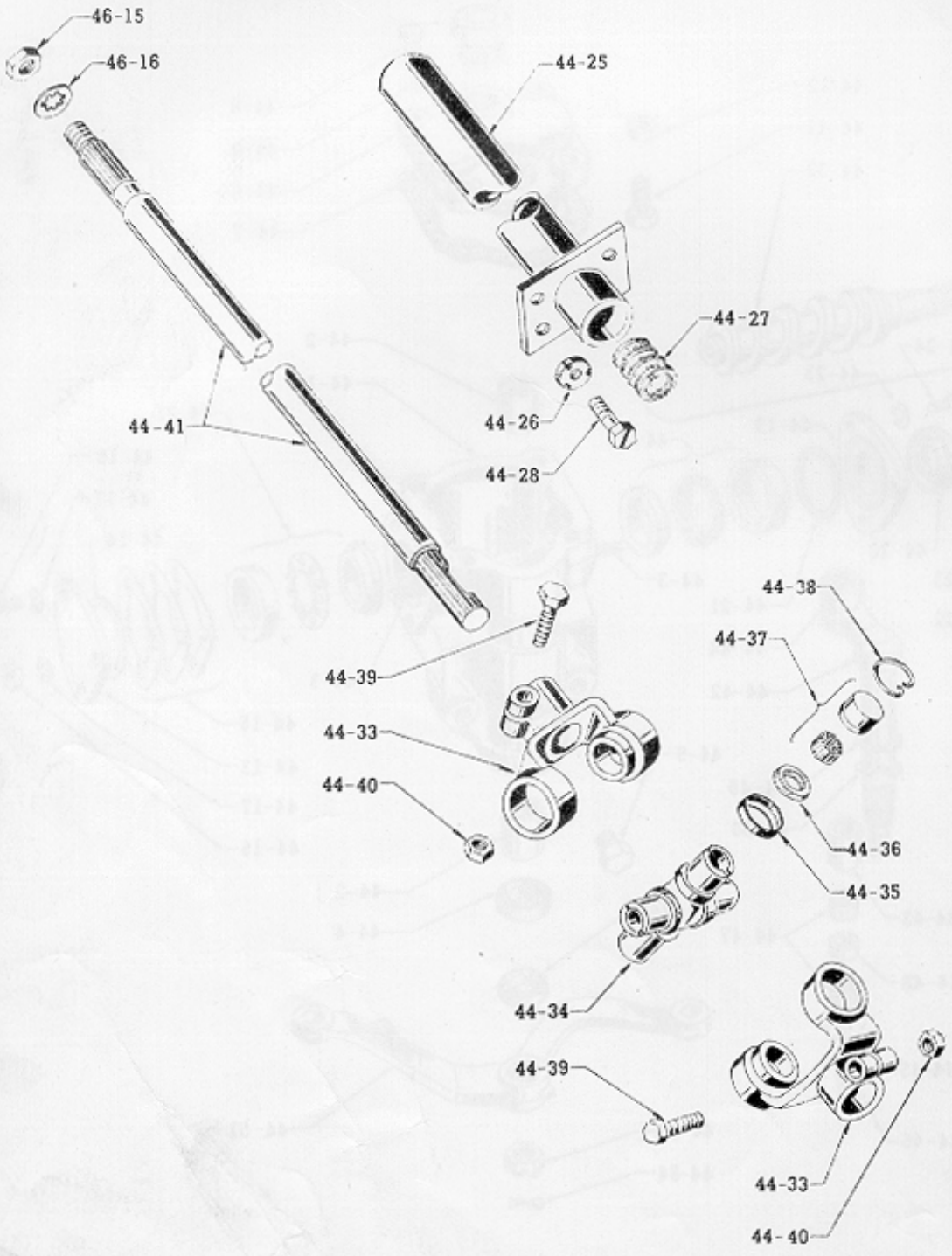

ILL. NO.	PART NO.	PART NAME	Q'TY PER SECTION SP310	Q'TY PER SECTION SPL310
		STEERING GEAR		
	◦ 48010-10450	ASS'Y-GEAR, steering	1	
	◦ 48010-10550	ASS'Y-GEAR, steering	-	1
44-1	48011-04100	COMPLETE-HOUSING, steering	1	1
44-2	48127-30001	BUSHING-idler shaft (steel back phos bronze)	2	2
44-3	48206-30800	STUD-housing, front	2	2
44-4	48539-10600	SEAL-oil, rocker shaft	1	1
44-5	11120-10460	PLUG-drain	1	1
44-6	48201-04100	COVER-rocker shaft	1	1
44-7	48204-30800	GASKET-rocker shaft cover (vellumoid)	1	1
44-8	1-24525	BOLT	2	2
	1-24535	BOLT (to fix rocker shaft cover)	2	2
44-9	9-15115	WASHER-lock	4	4
44-10	48064-04100	ASS'Y-PLUG, filler	1	1
44-11	48135-30800	SCREW-rocker shaft adjusting	1	1
44-12	9-11347	NUT-lock	1	1
44-13	48219-04100	COVER-housing, front	1	1
44-14	48035-04100	"O" RING-housing cover (rubber)	1	1
44-15	48210-04100	SHIM-worm bearing 0.76t	1	1
	48211-04100	SHIM-worm bearing 0.25t	1	1
	48212-04100	SHIM-worm bearing 0.13t	1	1
	48213-04100	SHIM-worm bearing 0.05t	1	1
44-16	9-11245	NUT	1	1
44-17	9-15115	WASHER-lock (to fix front cover)	3	3
44-18	1-24518	BOLT	2	2
44-19	48203-04100	COVER-housing rear	1	1
44-20	48029-04100	SEAL-oil, worm shaft	1	1
44-21	48035-04100	"O" RING-housing cover (rubber)	1	1
44-22	9-11245	NUT	1	1
44-23	9-15115	WASHER-lock (to fix rear cover)	3	3
44-24	1-24518	BOLT	2	2
44-25	48050-10401	COMPLETE-JACKET, steering column	1	-
	48050-10501	COMPLETE-JACKET, steering column	-	1

ILL. NO.	PART NO.	PART NAME	Q'TY PER SECTION SP310	Q'TY PER SECTION SPL310
44-26	48053-10500	WASHER-special lock	4	4
44-27	48054-10400	ASS'Y-BUSH, column	1	1
44-28	3-69414	BOLT	4	4
44-31	48025-04100	ASS'Y-BEARING, worm	2	2
44-32	48023-04100	WORM-steering gear	1	-
	48023-04200	WORM-steering gear	-	1
44-33	48081-04700	YOKE-universal joint	2	2
44-34	48085-04700	JOURNAL	1	1
44-35	37133-11960	RETAINER-oil seal, bearing	4	4
44-36	37134-11960	SEAL-oil, bearing (cart.)	4	4
44-37	37130-11960	ASS'Y-BEARING	4	4
44-38	37136-11960	RING-snap	4	4
44-39	1-24530	BOLT	2	2
44-40	9-11345	NUT	2	2
44-41	48020-10400	COMPLETE-COLUMN, steering	1	1
44-42	48100-04100	**ASS'Y-SHAFT, rocker**	1	1
44-43	48046-30800	RACE-needle roller	1	1
44-44	48062-30800	PLUG-ball roller	1	1
44-45	48047-30800	COVER-needle roller	1	1
44-46	48105-30800	BALL-roller 12,998φ		
	48106-30800	BALL-roller 12,993φ	1	1
	48107-30800	BALL-roller 12,988φ		
44-47	48108-95960	ROLLER-needle 2,540φ		
	48109-95960	ROLLER-needle 2,543φ	38	38
	48110-95960	ROLLER-needle 2,546φ		
44-48	48111-95960	SPACER-needle roller	1	1
44-49	48126-30800	WASHER-thrust, rocker shaft	1	
44-50	48125-30800	WASHER-adjusting, rocker shaft	1	1
44-51	48501-04100	ARM-steering gear	1	1

ILL. NO.	PART NO.	PART NAME		Q'TY PER SECTION SP310	Q'TY PER SECTION SPL310
44-52	48521-04100.....	SEAL-dust, rocker shaft		1	1
44-53	48504-04100.....	NUT-gear arm.....		1	1
44-54	9-21345.....	PIN-cotter		1	1
	9-16216.....	WASHER-lock	to fix steering gear ass'y	1	1
	1-24638.....	BOLT	.....	3	3
	9-12646.....	NUT	.....	2	2
	9-15116.....	WASHER-lock	.....	2	2

IDLER & ARM — Fig. 45

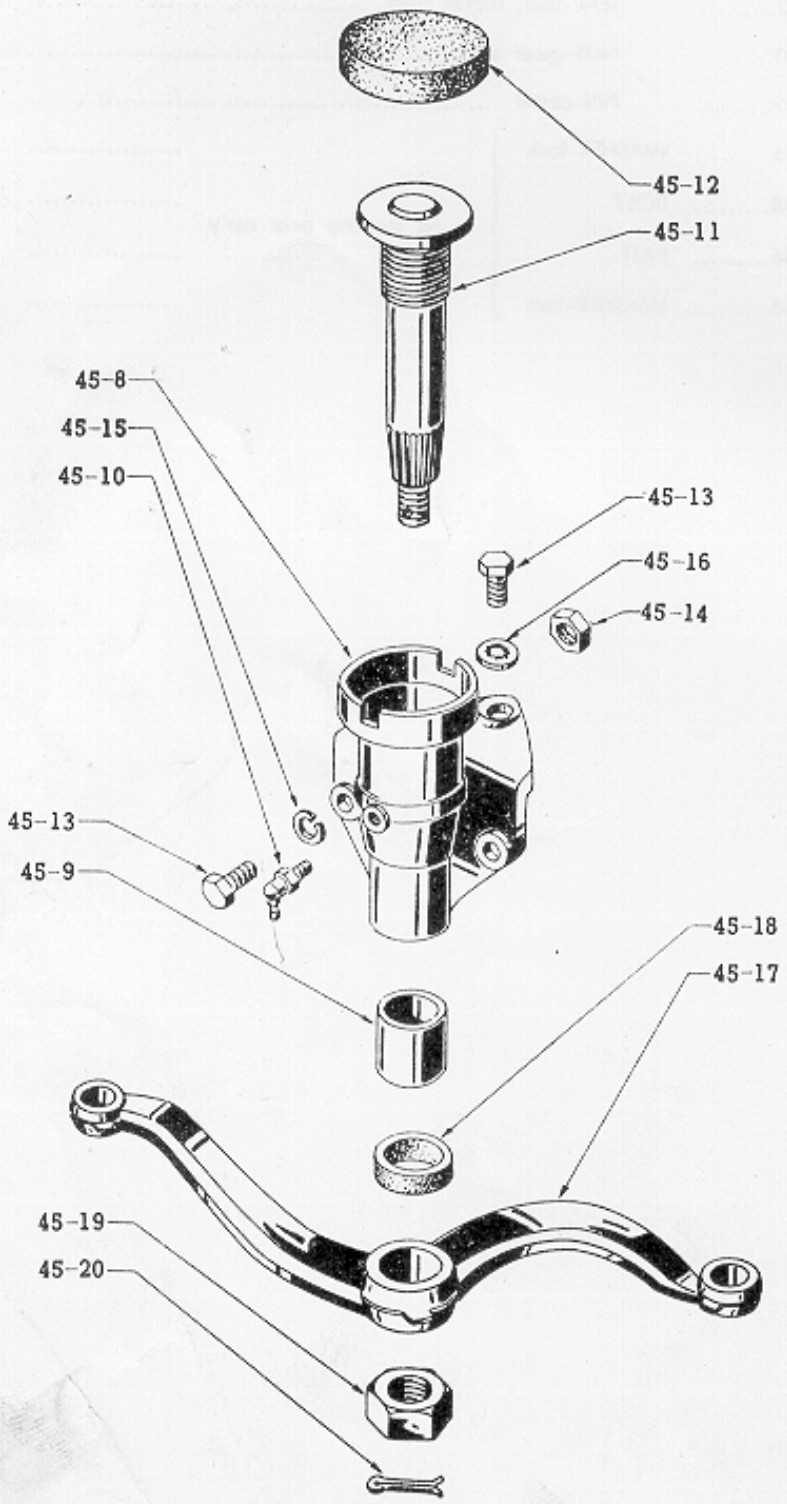

STEERING LINKAGE

Fig. 45-A

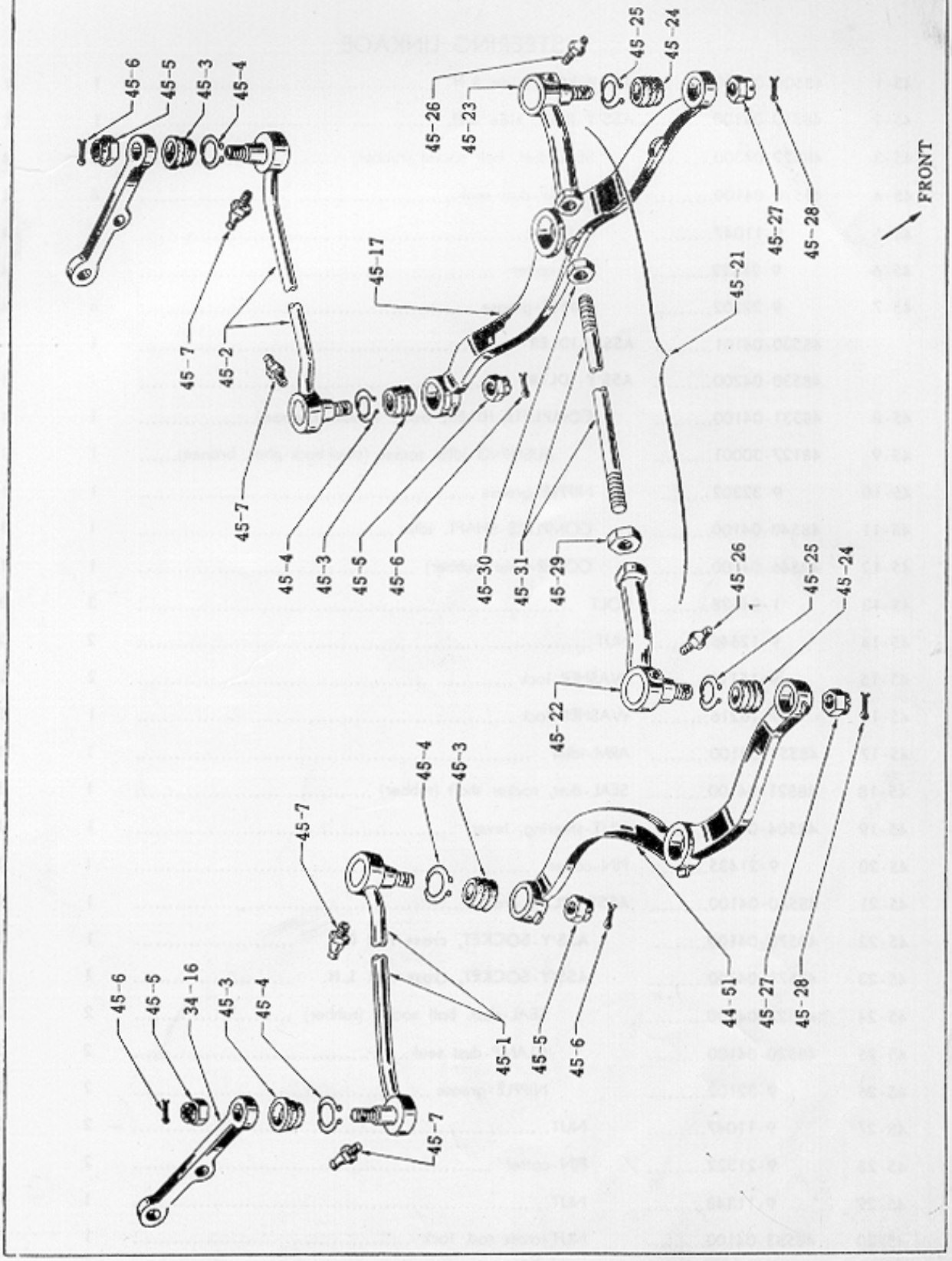

ILL. NO.	PART NO.	PART NAME	Q'TY PER SECTION SP310	Q'TY PER SECTION SPL310

STEERING LINKAGE

45-1	48509-04100	**ASS'Y-ROD, side R.H.**	1	1
45-2	48510-04100	**ASS'Y-ROD, side L.H.**	1	1
45-3	48522-04300	SEAL-dust, ball socket (rubber)	4	4
45-4	48520-04100	CLAMP-dust seal	4	4
45-5	9-11047	NUT	4	4
45-6	9-21322	PIN-cotter	4	4
45-7	9-32302	NIPPLE-grease	4	4
	48530-04101	**ASS'Y-IDLER**	1	-
	48530-04200	**ASS'Y-IDLER**	-	1
45-8	48531-04100	**COMPLETE-IDLER, body (phos. bronze)**	1	1
45-9	48127-30001	BUSHING-idler socket (steel back phos. bronze)	1	1
45-10	9-32302	NIPPLE-grease	1	1
45-11	48540-04100	COMPLETE-SHAFT, idler	1	1
45-12	48546-04100	COVER-idler (rubber)	1	1
45-13	1-24638	BOLT	3	3
45-14	9-12646	NUT	2	2
45-15	9-15116	WASHER-lock	2	2
45-16	9-16216	WASHER-lock	1	1
45-17	48551-04100	ARM-idler	1	1
45-18	48521-04100	SEAL-dust, rocker shaft (rubber)	1	1
45-19	48504-04100	NUT-steering, lever	1	1
45-20	9-21435	PIN-cotter	1	1
45-21	48560-04100	**ASS'Y-ROD, cross**	1	1
45-22	48570-04100	**ASS'Y-SOCKET, cross rod R.H.**	1	1
45-23	48571-04100	**ASS'Y-SOCKET, cross rod L.H.**	1	1
45-24	48522-04300	SEAL-dust, ball socket (rubber)	2	2
45-25	48520-04100	CLAMP-dust seal	2	2
45-26	9-32102	NIPPLE-grease	2	2
48-27	9-11047	NUT	2	2
45-28	9-21322	PIN-cotter	2	2
45-29	9-11348	NUT	1	1
45-30	48583-04100	NUT-cross rod, lock	1	1
45-31	48550-04100	BAR-cross rod	1	1

STEERING WHEEL

Fig. 46

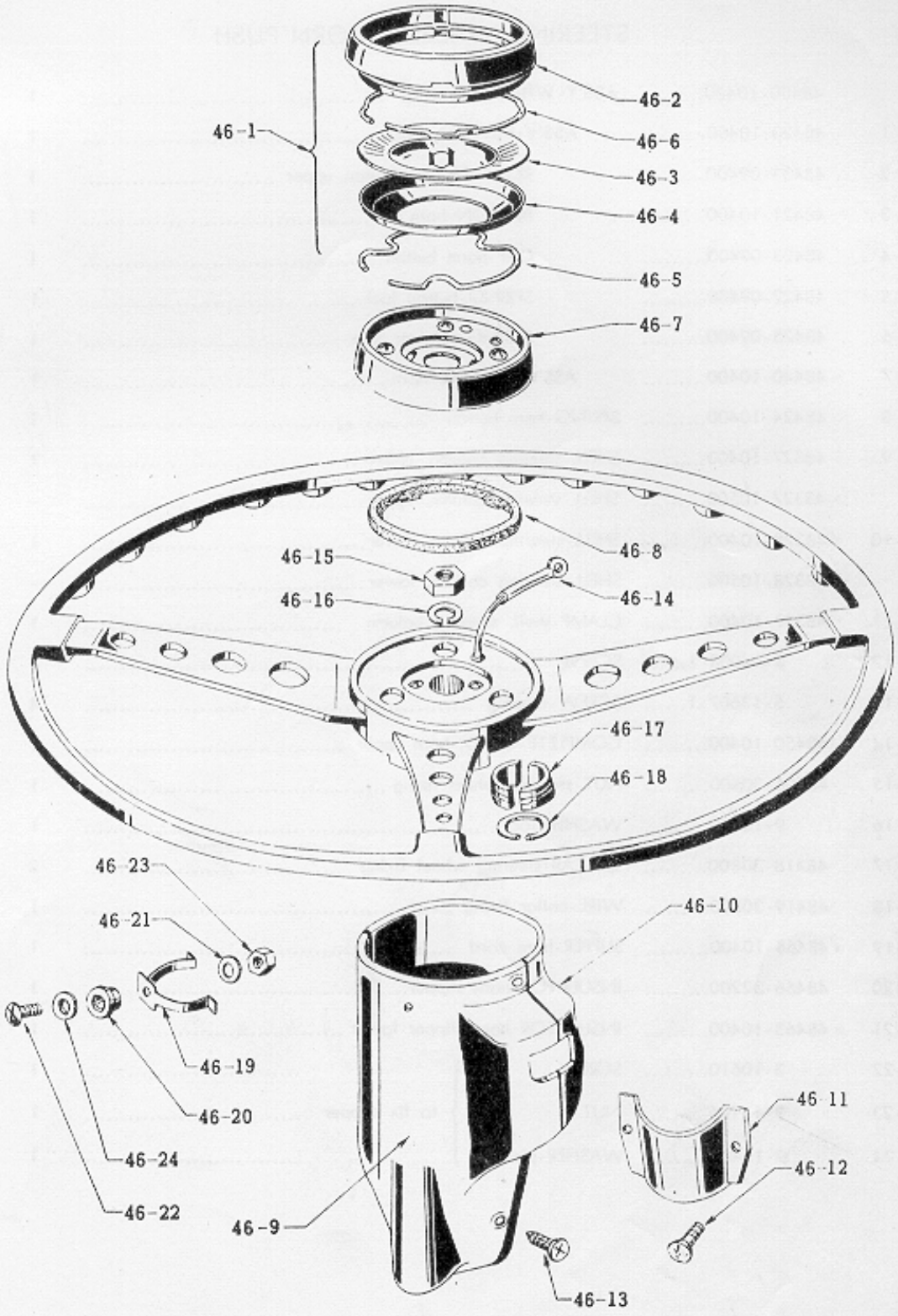

STEERING WHEEL & HORN PUSH

ILL. NO.	PART NO.	PART NAME	Q'TY PER SECTION SP310	Q'TY PER SECTION SPL310
	◦ 48400-10400	**ASS'Y-WHEEL, steering**	1	1
46-1	◦ 48420-10400	**ASS'Y-BUTTON, horn**	1	1
46-2	48433-09400	RETAINER-horn button, upper	1	1
46-3	◦ 48421-10400	BUTTON-horn	1	1
46-4	48423-09400	CAP-horn button	1	1
46-5	48422-09400	SPRING-button lock	1	1
46-6	48425-09400	SPRING-retainer lock	1	1
46-7	◦ 48440-10400	ASS'Y-SWITCH, horn	1	1
46-8	◦ 48424-10400	SPRING-horn button	1	1
46-9	◦ 48327-10400	SHELL-steering column, upper	1	-
	◦ 48327-10500	SHELL-steering column, upper	-	1
46-10	◦ 48328-10400	SHELL-steering column, lower	1	-
	◦ 48328-10500	SHELL-steering column, lower	-	1
46-11	◦ 48332-10400	CLAMP-shell, steering column	1	1
46-12	3-14008-1	SCREW	2	2
46-13	5-13607-1	SCREW-tapping	4	4
46-14	◦ 48450-10400	COMPLETE-CORD, horn upper	1	1
46-15	48405-30800	NUT-steering wheel fixing	1	1
46-16	9-16120	WASHER-lock	1	1
46-17	48418-30800	COLLAR-steering wheel fixing	2	2
46-18	48419-30800	WIRE-collar fixing	1	1
46-19	◦ 48465-10400	SLIPPER-horn cord	1	1
46-20	48466-32200	INSULATOR-horn slipper	1	1
46-21	◦ 48463-10400	INSULATOR-horn slipper lower	1	1
46-22	3-10610	SCREW (to fix slipper)	1	1
46-23	9-11106	NUT (to fix slipper)	1	1
46-24	9-15406	WASHER-plain (to fix slipper)	1	1

50100-10400 **FRAME** **Fig. 47**

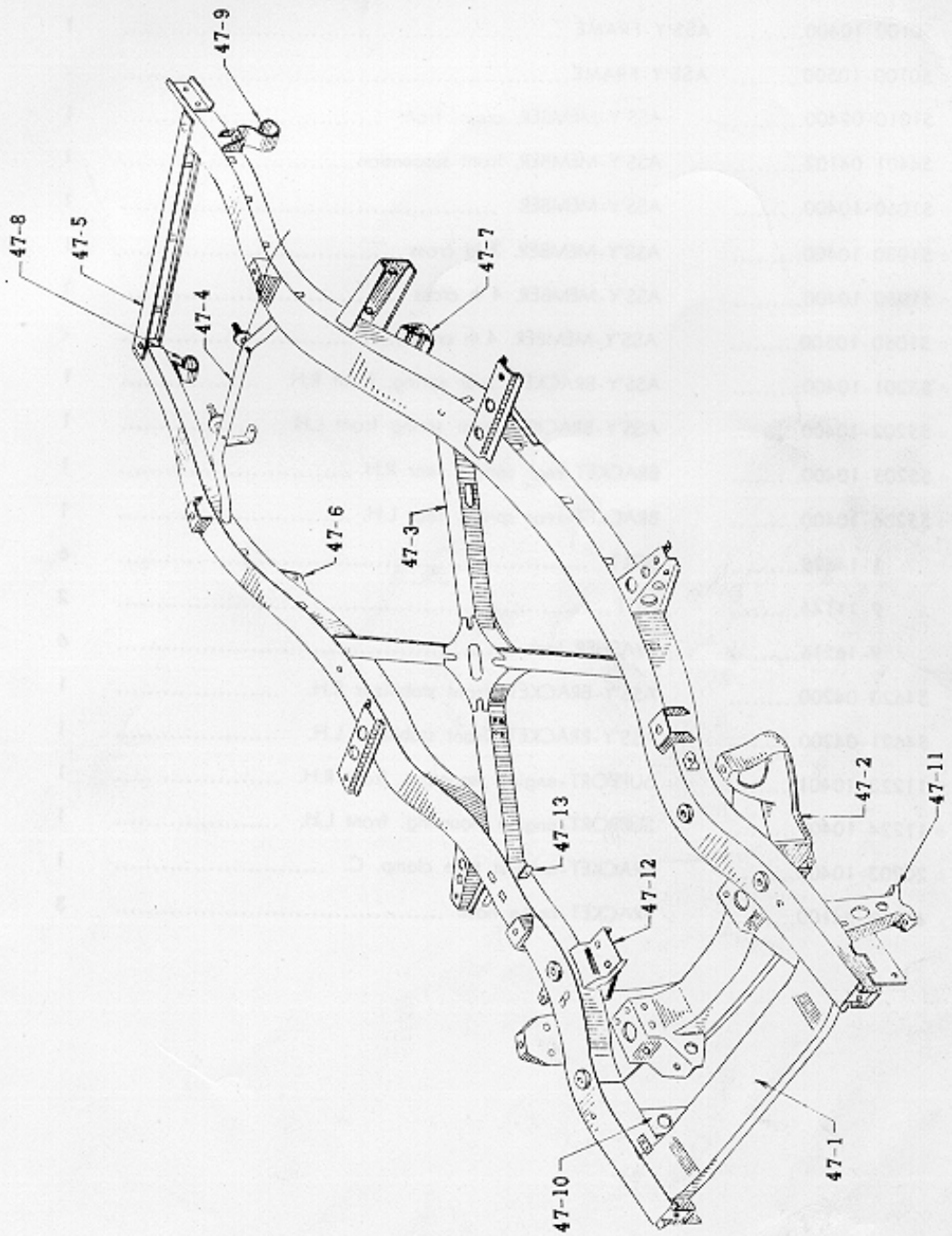

FRAME

ILL. NO.	PART NO.	PART NAME	Q'TY PER SECTION SP310	Q'TY PER SECTION SPL310
	○ 50100-10400	**ASS'Y-FRAME**	1	-
	○ 50100-10500	**ASS'Y-FRAME**	-	1
47-1	51010-09400	ASS'Y-MEMBER, cross, front	1	1
47-2	54401-04102	ASS'Y-MEMBER, front suspension	1	1
47-3	○ 51060-10400	ASS'Y-MEMBER	1	1
47-4	○ 51030-10400	ASS'Y-MEMBER, 3 rd cross	1	1
47-5	○ 51050-10400	ASS'Y-MEMBER, 4 th cross	1	-
	○ 51050-10500	ASS'Y-MEMBER, 4 th cross	-	1
47-6	○ 55201-10400	ASS'Y-BRACKET, rear spring, front R.H.	1	1
47-7	○ 55202-10400	ASS'Y-BRACKET, rear spring front L.H.	1	1
47-8	○ 55205-10400	BRACKET-rear spring, rear R.H.	1	1
47-9	○ 55206-10400	BRACKET-rear spring, rear L.H.	1	1
	1-14628	BOLT	6	6
	9-11146	NUT	2	2
	9-16216	WASHER-lock	6	6
47-10	54620-04200	ASS'Y-BRACKET, front stabilizer R.H.	1	1
47-11	54621-04200	ASS'Y-BRACKET, front stabilizer L.H.	1	1
47-12	○ 11223-10401	SUPPORT-engine mounting, front R.H.	1	1
	○ 11224-10401	SUPPORT-engine mounting, front L.H.	1	1
	○ 20203-10400	BRACKET-exhaust tube clamp, C.	1	1
47-13	46269-04100	BRACKET-brake hose	3	3

FRONT SUSPENSION MEMBER & SHOCK ABSORBER Fig. 48

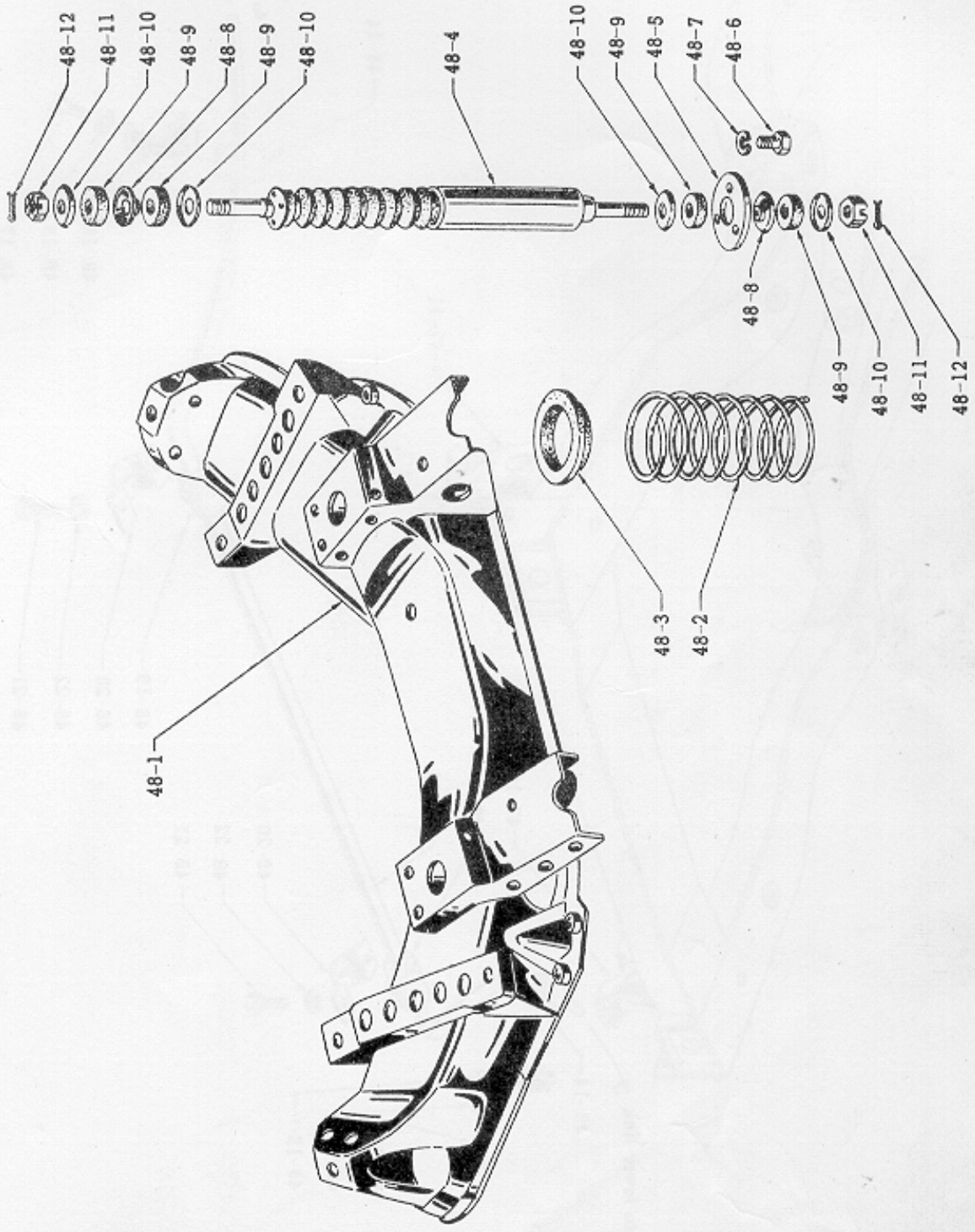

FRONT STABILIZER MOUNTING

Fig. 48-A

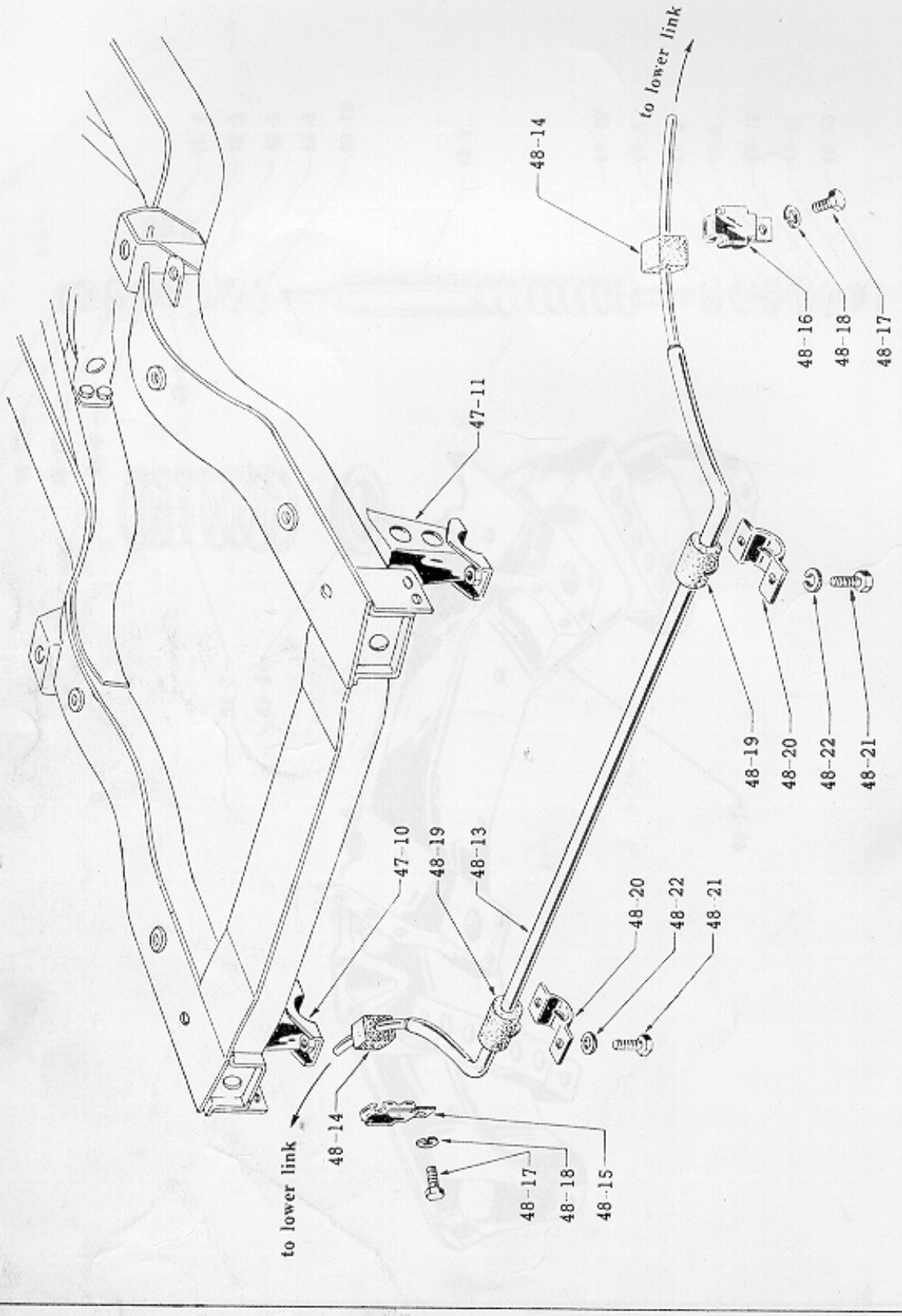

FRONT SUSPENSION (2)

ILL. NO.	PART NO.	PART NAME	Q'TY PER SECTION SP310	SPL310
48-1	(54401-04102)	ASS'Y-MEMBER, front suspension	1	1
48-2	○ 54010-10401	SPRING-front	2	-
	○ 54010-10501	SPRING-front	U-2	2
48-3	54036-04100	SEAT-rubber, front spring	2	2
48-4	56110-04200	ASS'Y-SHOCK ABSORBER, front	2	2
48-5	56115-04101	BRACKET-mounting, front shock absorber, lower	2	2
48-6	3-69416-1	SCREW	6	6
48-7	9-15114-1	WASHER-lock	6	6
48-8	○ 56113-09400	WASHER-special, outer	4	4
48-9	○ 56112-09400	BUSHING-subber, shock absorber	8	8
48-10	○ 56114-09400	WASHER-special, inner	8	8
48-11	9-11746-1	NUT-slotted	4	4
48-12	9-21222-1	PIN-cotter	4	4
48-13	○ 54611-10400	BAR-torsion, front stabilizer	1	1
48-14	54616-04200	BUSHING-rubber, front stabilizer, link side	2	2
48-15	54617-04200	CLIP-front stabilizer, link side R.H.	1	1
48-16	54618-04200	CLIP-front stabilizer, link side L.H.	1	1
48-17	3-69008-1	SCREW	2	2
48-18	9-15110	WHSHER-lock	2	2
48-19	○ 54613-10400	BUSHING-rubber, front stabilizer, frame side	2	2
48-20	54614-04200	RETAINER-bush, front stabilizer, frame side	2	2
48-21	1-14416-1	BOLT	4	4
48-22	9-15114	WASHER-lock	4	4

REAR SUSPENSION & SHOCK ABSORBER — Fig. 49

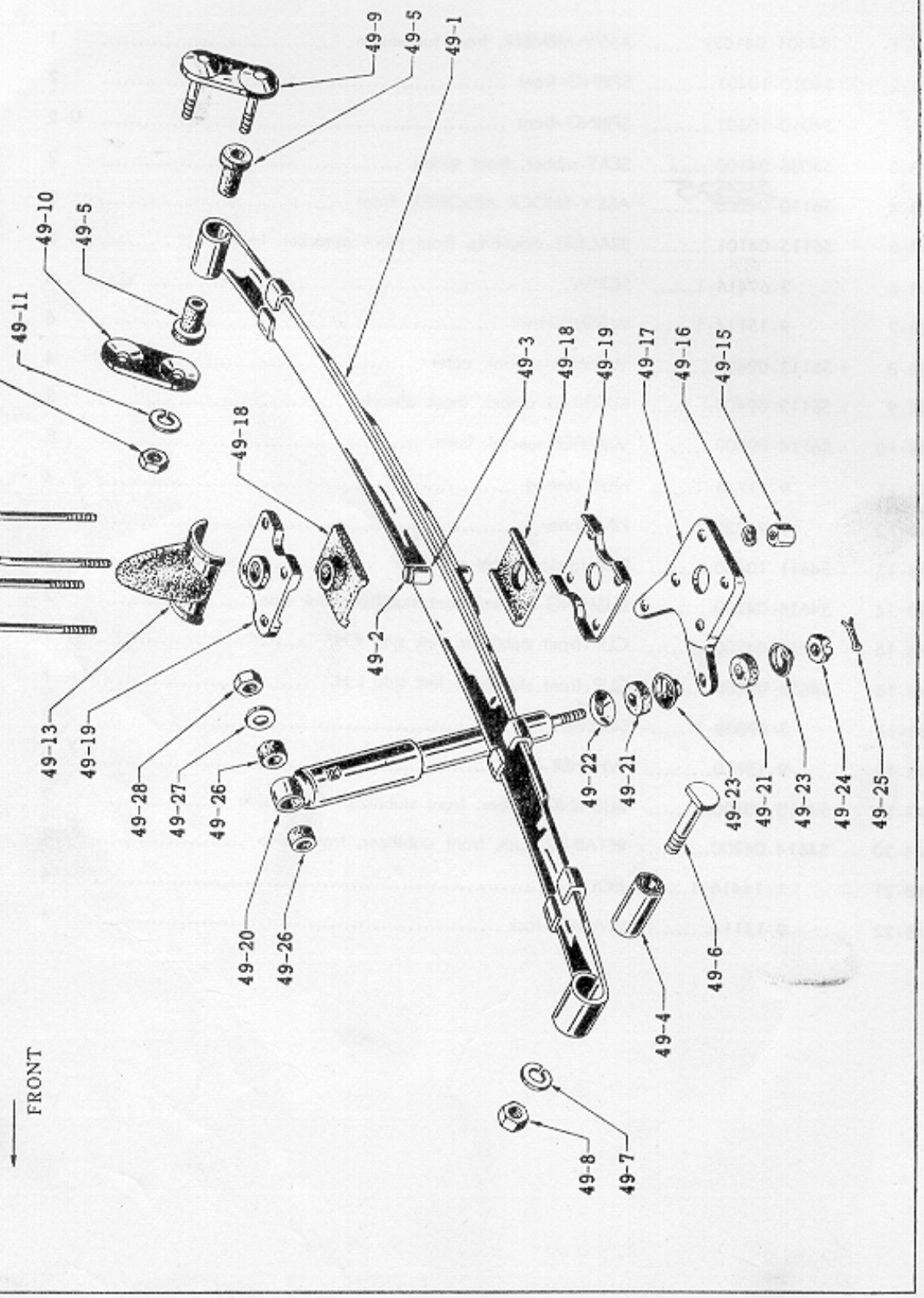

REAR SUSPENSION

ILL. NO.	PART NO.	PART NAME	Q'TY PER SECTION SP310	Q'TY PER SECTION SPL310
	55020-10400	**ASS'Y-SPRING, rear**	2	-
	55021-10400	LEAF-rear spring No. 1	2	-
	55022-10400	LEAF-rear spring No. 2	2	-
	55057-10400	BOLT-cevter	2	-
49-1	○ 55020-10500	**ASS'Y-SPRING, rear**	U-2	2
	○ 55021-10500	LEAF-rear spring No. 1	U-2	2
	○ 55022-10500	LEAF-rear spring No. 2	U-2	2
	○ 55023-10500	LEAF-rear spring No. 3	U-2	2
	○ 55024-10500	LEAF-rear spring No. 4	U-2	2
49-2	○ 55057-10500	BOLT-center	U-2	2
49-3	55056-04100	PIECE-distance, center bolt nut	2	2
	9-99204	NUT	2	2
49-4	55045-04100	BUSHING-rear spring	2	2
49-5	55046-04100	BUSHING-rubber, rear spring, rear (black rubber)	8	8
49-6	55224-04100	PIN-rear spring, front	2	2
49-7	9-15117-1	WASHER-lock	2	2
49-8	9-11147-1	NUT	2	2
49-9	55220-04100	ASS'Y-SHACKLE, rear spring	2	2
49-10	55221-04100	SHACKLE-rear spring	2	2
49-11	9-15117-1	WASHER-lock	4	4
49-12	9-11147-1	NUT	4	4
49-13	55240-04102	ASS'Y-BUMPER, rear axle	2	2
49-14	○ 55247-10400	CLIP-rear spring	4	-
	○ 55247-10500	CLIP-rear spring	U-4	4
49-15	9-11546-1	NUT	8	8
49-16	9-15216-1	WASHER-lock	8	8
49-17	55262-04102	SEAT-rear spring R.H.	1	1
	55266-04102	SEAT-rear spring L.H.	1	1
49-18	55243-04100	PAD-seating, rear spring	4	4
49-19	55054-04101	PLATE-locating, rear spring	4	4
49-20	56210-04200	ASS'Y-SHOCK ABSORBER, rear	2	2
49-21	○ 56117-09400	BUSHING-rubber, shock absorber	4	4

ILL. NO.	PART NO.	PART NAME	Q'TY PER SECTION SP310	Q'TY PER SECTION SPL310
49-22	○ 56113-09400.....	WASHER-special, outer	2	2
49-23	○ 56114-09400.....	WASHER-special, inner	4	4
49-24	9-11746-1.....	NUT	2	2
49-25	9-21222-1.....	PIN-cotter	2	2
49-26	56127-45460.....	BUSHING-rubber, shock absorber	4	4
49-27	56229-04100.....	WASHER-special	2	2
49-28	9-12350-1.....	NUT-lock.....	2	2

ILL. NO.	PART NO.	PART NAME	Q'TY PER SECTION SP310	Q'TY PER SECTION SPL310

TONNEAU COVER

	73150-10400.....	COVER-tonneau	1	-
	73150-10500.....	COVER-tonneau	-	1

BODY MOUNTING

○	95190-10400.....	FELT-body mounting "A"	6	6
○	95191-10400.....	FELT-body mounting "B"	5	5
○	95155-10400.....	SHIM-body mounting "C"	14	14
	95144-04100.....	ASS'Y-NUT, body mounting	8	8
	1-14630-1.....	BOLT	8	8
	1-14835-1.....	BOLT	6	6
	9-12548-1.....	NUT.....	2	2
	9-15516-1.....	WASHER-plain.....	8	8
	9-15116.....	WASHER-lock	8	8
	9-15518-1.....	WASHER-plain	8	8
	9-15118.....	WASHER-lock	6	6

BODY

ILL. NO.	PART NO.	PART NAME	Q'TY PER SECTION SP310	Q'TY PER SECTION SPL310
FRONT APRON & BUMPER				
50-1	○ 62600-10400	ASS'Y-APRON, front	1	1
50-2	○ 62330-10400	ASS'Y-CROSSMEMBER, radiator grille	1	1
50-3	○ 62672-36700	PLUG-hole, fog lamp	2	2
	○ 62650-10400	ASS'Y-BUMBER, front	1	-
50-4	○ 62650-10401	ASS'Y-BUMPER, front	U-1	1
50-5	○ 62670-10400	ASS'Y-STAY, front bumper	2	2
50-6	1-14620-1	BOLT	4	4
50-7	9-15416-1	WASHER-plain (stay to bumper)	4	4
50-8	9-15116-1	WASHER-lock (stay to bumper)	4	4
50-9	1-14625-1	BOLT	4	4
50-10	9-15416-1	WASHER-plain (stay to frome)	4	4
50-11	9-15116-1	WASHER-lock (stay to frome)	4	4
50-12	9-11146-1	NUT (stay to frome)	4	4
50-13	○ 62663-10401	ASS'Y-OVERRIDER	U-2	2
50-14	1-14516-1	BOLT	4	4
50-15	9-15415-1	WASHER-plain (overrider fix)	4	4
50-16	9-15115-1	WASHER-lock	4	4
RADIATOR GRILLE				
50-17	○ 62300-10400	ASS'Y-GRILLE, radiator	1	1
50-18	3-14012-1	SCREW (to fix radiator grille)	5	5
50-19	9-15110-1	WASHER-lock (to fix radiator grille)	5	5
50-20	9-15410-1	WASHER-plain (to fix radiator grille)	8	8
50-21	9-11140-1	NUT (to fix radiator grille)	3	3

BODY FRONT

Fig. 50

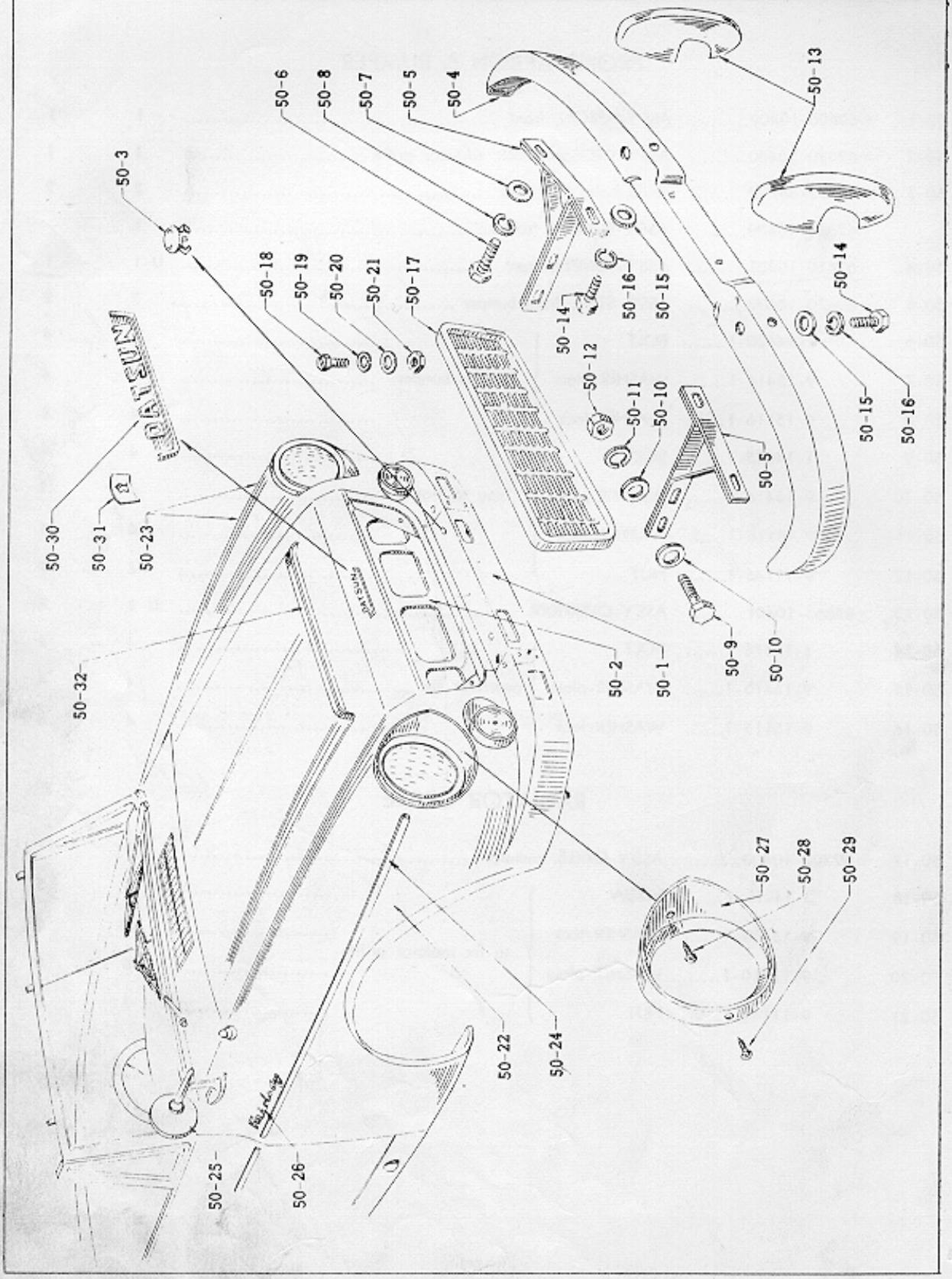

ILL. NO.	PART NO.	PART NAME	Q'TY PER SECTION SP310	Q'TY PER SECTION SPL310
		FRONT FENDER		
50-22	○ 63100-10430	ASS'Y-FENDER, front R.H.	1	1
50-23	○ 63101-10430	ASS'Y-FENDER, front L.H.	1	1
	3-44412-1	SCREW — to fix fender	32	32
	74340-12161	WASHER-special 6 φ — to fix fender	32	32
	9-15114-1	WASHER-lock — to fix fender	32	32
	9-11144-1	NUT — to fix fender	32	32
	1-14516-1	BOLT — to sill	2	2
	9-15415-1	WASHER-plain — to sill	2	2
	9-14645-1	NUT	2	2
	1-14516-1	BOLT	2	2
	9-15415-1	WASHER-plain	2	2
50-24	○ 63801-~~10400~~ 12900	ASS'Y-SIDE FLASH, front fender R.H.	1	1
	○ 63802-~~10400~~ 12900	ASS'Y-SIDE FLASH, front fender L.H.	1	1
50-25	96301-35000	ASS'Y-BACK MIRROR, outside	1	-
	○ 96301-10500	ASS'Y-BACK MIRROR, outside	U-1	1
50-26	63805-04700	EMBLEM-side (Zn die cast)	2	2
	PFS-104	NUT-spire	6	6
50-27	○ 63821-10400	RIM-head lamp R.H.	1	1
	○ 63822-10400	RIM-head lamp L.H.	1	1
50-28	5-30610-2	SCREW-tapping	2	2
50-29	5-10607-2	SCREW-tapping	2	2
50-30	○ 65801-10400	EMBLEM-hood top (Zn die cast)	1	1
50-31	PFS-106	NUT-spire	3	3
50-32	○ 65810-10400	FLASH-hood	1	1

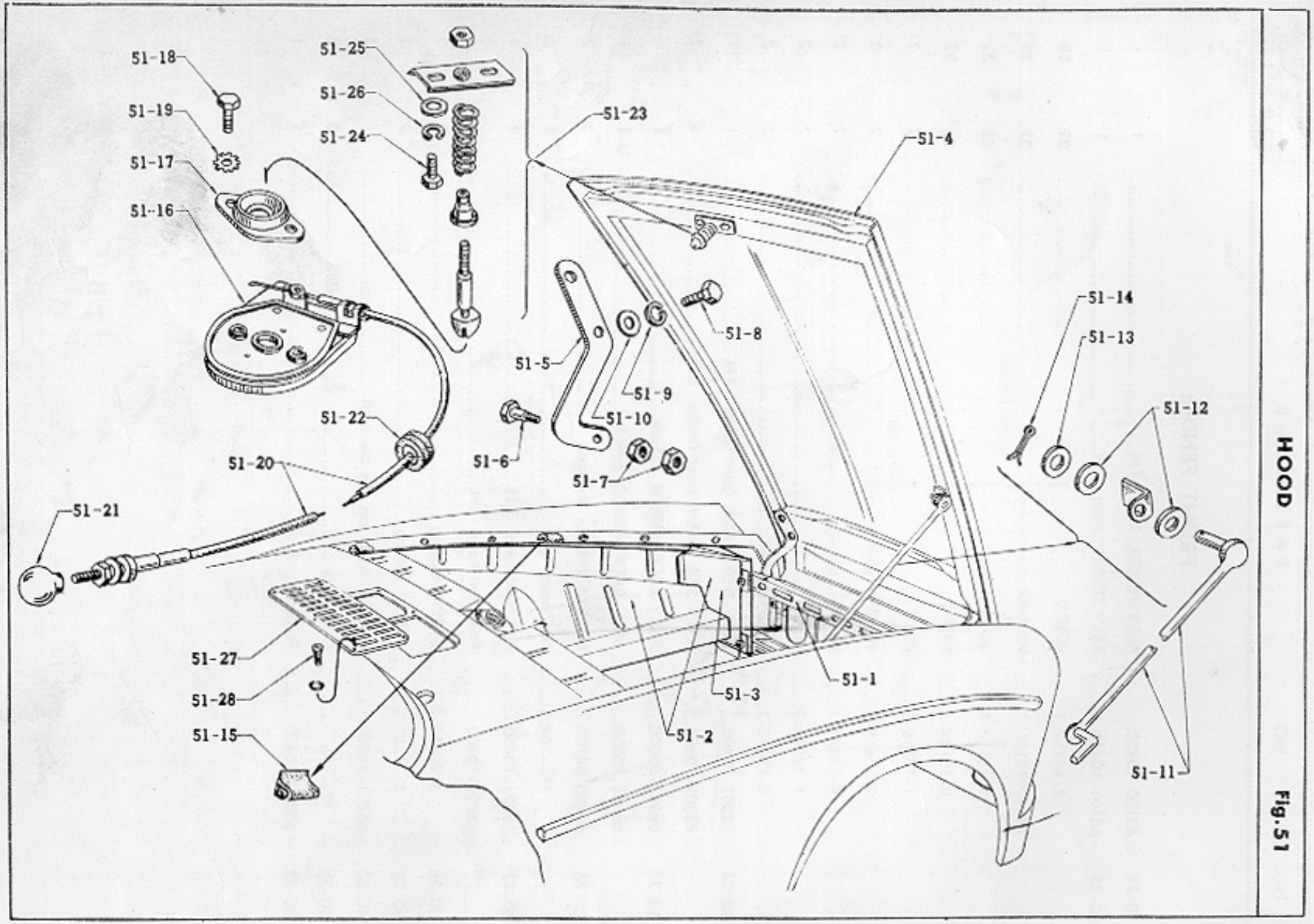
51-18
51-19
51-17
51-16
51-25
51-26
51-24
51-23
51-4
51-8
51-5
51-9
51-10
51-6
51-7
51-22
51-20
51-21
51-14
51-13
51-12
51-27
51-28
51-15
51-1
51-3
51-2
51-11

HOOD

Fig.51

ILL. NO.	PART NO.	PART NAME	Q'TY PER SECTION SP310	Q'TY PER SECTION SPL310
		FRONT FENDER		
50-22	○ 63100-10430	ASS'Y-FENDER, front R.H.	1	1
50-23	○ 63101-10430	ASS'Y-FENDER, front L.H.	1	1
	3-44412-1	SCREW } to fix fender	32	32
	74340-12161	WASHER-special 6 ϕ } to fix fender	32	32
	9-15114-1	WASHER-lock } to fix fender	32	32
	9-11144-1	NUT } to fix fender	32	32
	1-14516-1	BOLT } to sill	2	2
	9-15415-1	WASHER-plain } to sill	2	2
	9-14645-1	NUT	2	2
	1-14516-1	BOLT	2	2
	9-15415-1	WASHER-plain	2	2
50-24	○ 63801-~~10400~~ 12900	ASS'Y-SIDE FLASH, front fender R.H.	1	1
	○ 63802-~~10400~~ 12906	ASS'Y-SIDE FLASH, front fender L.H.	1	1
50-25	96301-35000	ASS'Y-BACK MIRROR, outside	1	-
	○ 96301-10500	ASS'Y-BACK MIRROR, outside	U-1	1
50-26	63805-04700	EMBLEM-side (Zn die cast)	2	2
	PFS-104	NUT-spire	6	6
50-27	○ 63821-10400	RIM-head lamp R.H.	1	1
	○ 63822-10400	RIM-head lamp L.H.	1	1
50-28	5-30610-2	SCREW-tapping	2	2
50-29	5-10607-2	SCREW-tapping	2	2
50-30	○ 65801-10400	EMBLEM-hood top (Zn die cast)	1	1
50-31	PFS-106	NUT-spire	3	3
50-32	○ 65810-10400	FLASH-hood	1	1

ILL. NO.	PART NO.	PART NAME	Q'TY PER SECTION SP310	Q'TY PER SECTION SPL310
		RADIATOR CORE SUPPORT		
51-1	○ 62506-10400.....	ASS'Y-CHANNEL, radiator core support	2	2
	1-14520-1.....	BOLT	4	4
	9-15115-1.....	WASHER-lock } channel to body	4	4
	9-15515-1.....	WASHER-plain	4	4
	1-14524-1.....	BOLT	4	4
	9-15115-4.....	WASHER-lock } radiator mounting	4	4
	9-15515-1.....	WASHER-plain	4	4
		HOOD LEDGE		
	○ 64100-10430.....	**ASS'Y-HOOD LEDGE R.H.**	1	-
	○ 64100-10530.....	**ASS'Y-HOOD LEDGE R.H.**	-	1
51-2	○ 64101-10430.....	**ASS'Y-HOOD LEDGE L.H.**	1	1
	○ 62504-10400.....	PANEL-radiator core support R.H.	1	1
51-3	○ 62505-10400.....	PANEL-radiator core support L.H.	1	1
		HOOD		
51-4	○ 65100-10430.....	ASS'Y-HOOD	1	1
51-5	○ 65405-10400.....	HINGE-hood	2	2
51-6	65409-04100.....	PIN-hinge, hood	2	2
51-7	9-11144-1.....	NUT	4	4
51-8	1-14516-1.....	BOLT	4	4
51-9	9-15115-1.....	WASHER-lock } hinge to hood reinforce	4	4
51-10	9-15415-1.....	WASHER-plain	4	4
51-11	○ 65701-10400.....	ASS'Y-ROD, hood support	1	1
51-12	65846-43700.....	PACKING-hood support	2	2
51-13	9-15514-1.....	WASHER-plain	1	1
51-14	9-21215-1.....	PIN-cotter	1	1

ILL. NO.	PART NO.	PART NAME	Q'TY PER SECTION SP 310	Q'TY PER SECTION SPL 310
51-15	65158-04100.....	BUMPER-hood side	4	4
51-16	65617-10400.....	ASS'Y-LOCK, hood.....	1	-
	65617-00800.....	ASS'Y-LOCK, hood.....	-	1
51-17	65630-01300.....	PLATE-dovetail bolt guide	1	1
51-18	1-14412-1.....	BOLT	2	2
51-19	9-16314-1.....	WASHER-lock	2	2
51-20	65645-10400.....	ASS'Y-WIRE, hood lock	1	1
51-21	66503-05000.....	KNOB-cowl ventilator lever	1	1
51-22	9-51106.....	GROMMET-rubber	1	1
51-23	65601-01300.....	ASS'Y-MALE, hood lock	1	1
51-24	1-14412-1.....	BOLT	2	2
51-25	9-15414-1.....	WASHER-plain	2	2
51-26	9-15114-1.....	WASHER-lock	2	2
51-27	66305-10400.....	GRILLE-cowl top	1	1
51-28	5-30613-2.....	SCREW-tapping	6	6

DASH FITTING

Fig. 52

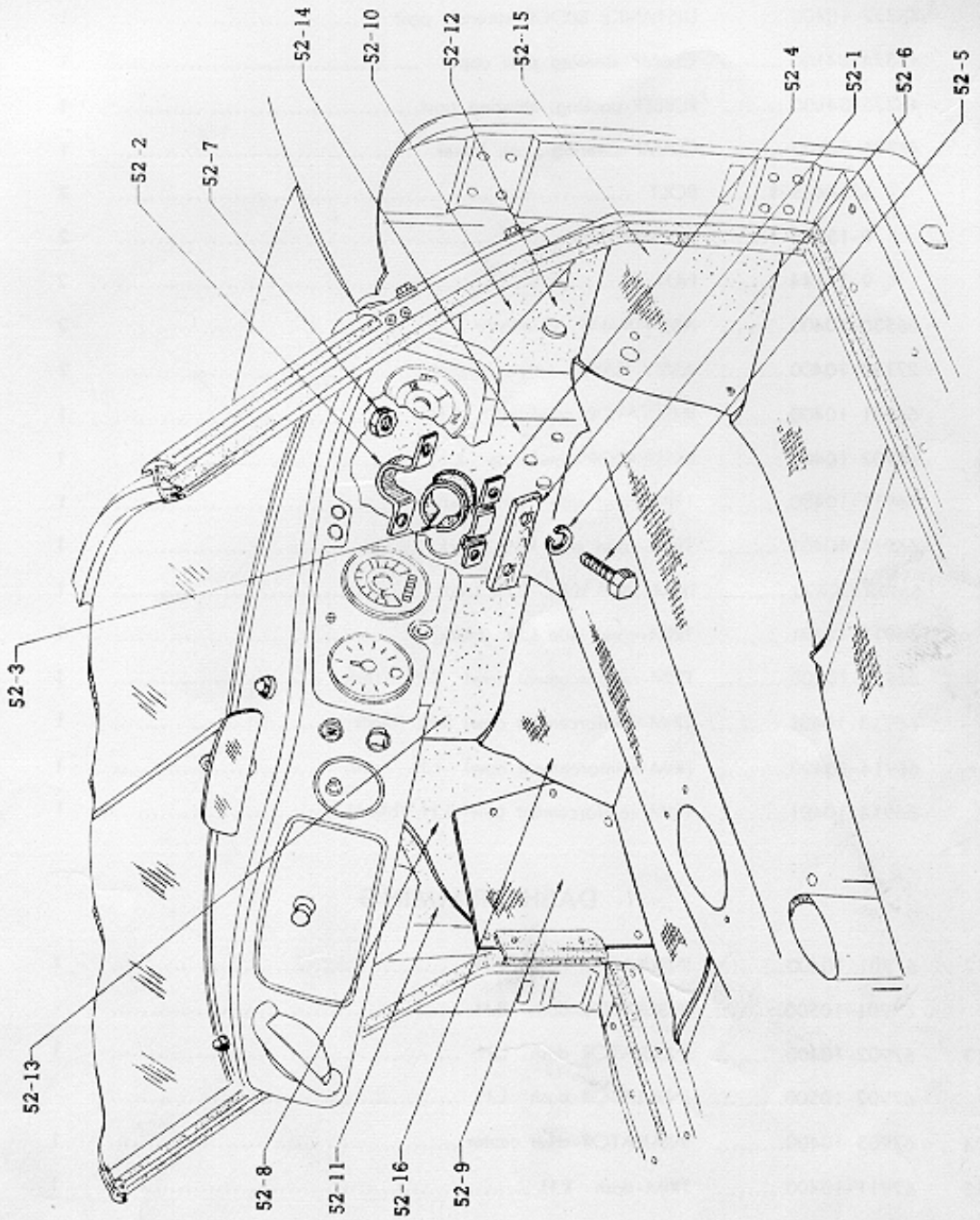

ILL. NO.	PART NO.	PART NAME	Q'TY PER SECTION SP310	Q'TY PER SECTION SPL310

COWL TOP FITTING

52-1	◦ 48322-10400.....	DISTANCE BLOCK-steering post	1	1
52-2	48324-04100.....	CLAMP-steering post upper	1	1
52-3	48325-04100.....	RUBBER-packing, steering post.....	1	1
52-4	48326-04100.....	CLAMP-steering post, lower	1	1
52-5	1-14425-1.....	BOLT	2	2
52-6	9-15114-1.....	WASHER-lock	2	2
52-7	9-11144-1.....	NUT.....	2	2
	◦ 66530-10400.....	ASS'Y-VALVE, ventilator	2	2
	◦ 27130-10400.....	ASS'Y-CABLE, valve control	2	2
	◦ 66901-10400.....	INSULATOR-cowl side R.H.	1	1
52-8	◦ 66902-10400.....	INSULATOR-cowl side L.H.	1	1
	◦ 66911-10400.....	TRIM-cowl side R.H. (red)	1	1
	66911-10401.....	TRIM-cowl side R.H. (black)	1	1
52-9	◦ 66912-10400.....	TRIM-cowl side L.H. (red)	1	1
	◦ 66912-10401.....	TRIM-cowl side L.H. (black)	1	1
52-10	66913-10400.....	TRIM-reinforcement cowl R.H. (red)	1	1
	66913-10401.....	TRIM-reinforcement cowl R.H. (black).....	1	1
52-11	66914-10400.....	TRIM-reinforcement cowl L.H. (red)	1	1
	◦ 66914-10401.....	TRIM-reinforcement cowl L.H. (black).....	1	1

DASH TRIMMING

52-12	◦ 67901-10400.....	INSULATOR-dash R.H.	1	-
	◦ 67901-10500.....	INSULATOR-dash R.H.	-	1
52-13	◦ 67902-10400.....	INSULATOR-dash L.H.	1	-
	◦ 67902-10500.....	INSULATOR-dash L.H.	-	1
52-14	◦ 67903-10400.....	INSULATOR-dash center	1	1
52-15	◦ 67911-10400.....	TRIM-dash R.H.	1	-
	◦ 67911-10500.....	TRIM-dash R.H.	-	1
52-16	◦ 67912-10400.....	TRIM-dash L.H.	1	-
	◦ 67912-10500.....	TRIM-dash L.H.	-	1

DASH FITTING

Fig. 52

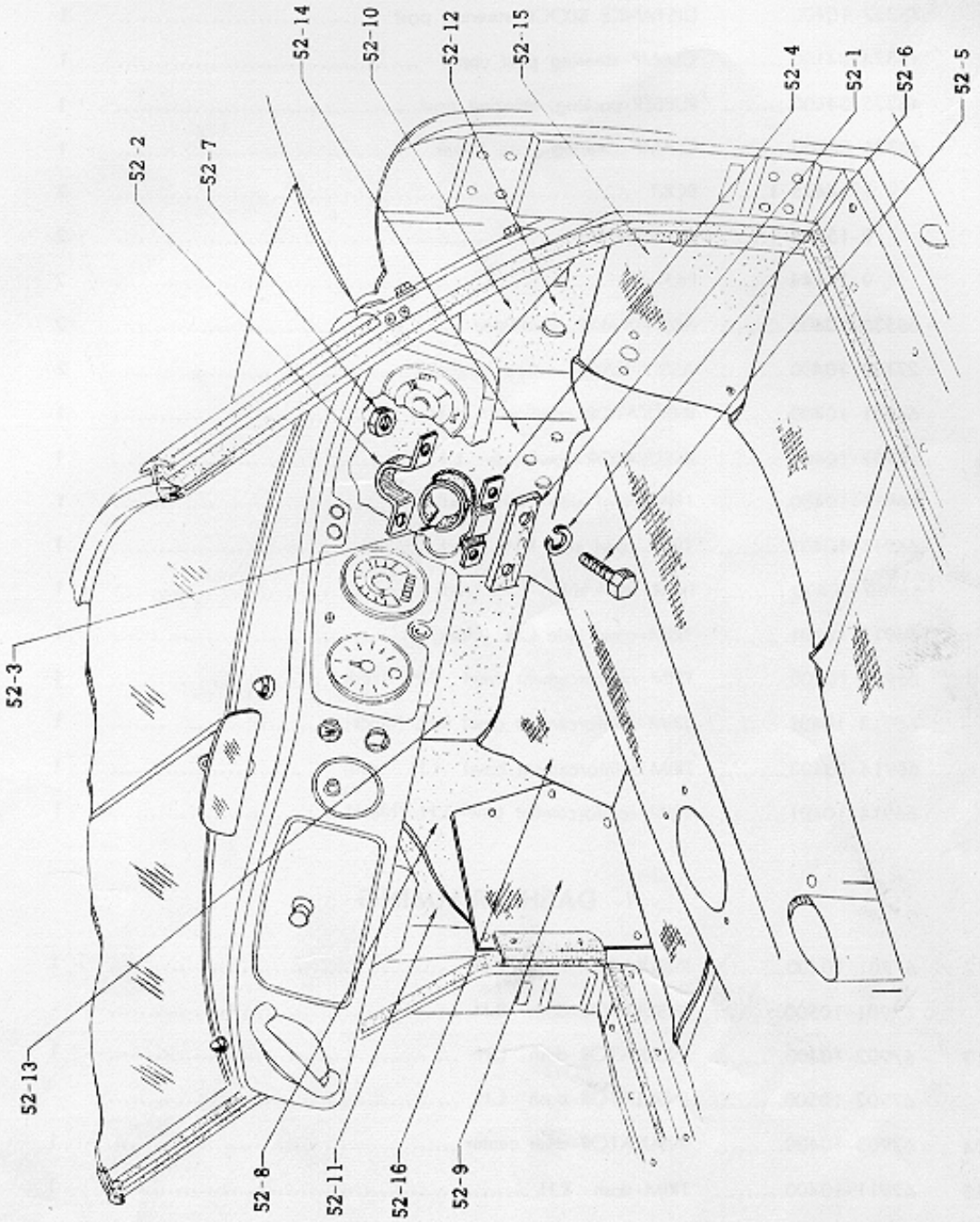

INSTRUMENT & WINDSHIELD FITTING

Fig. 53

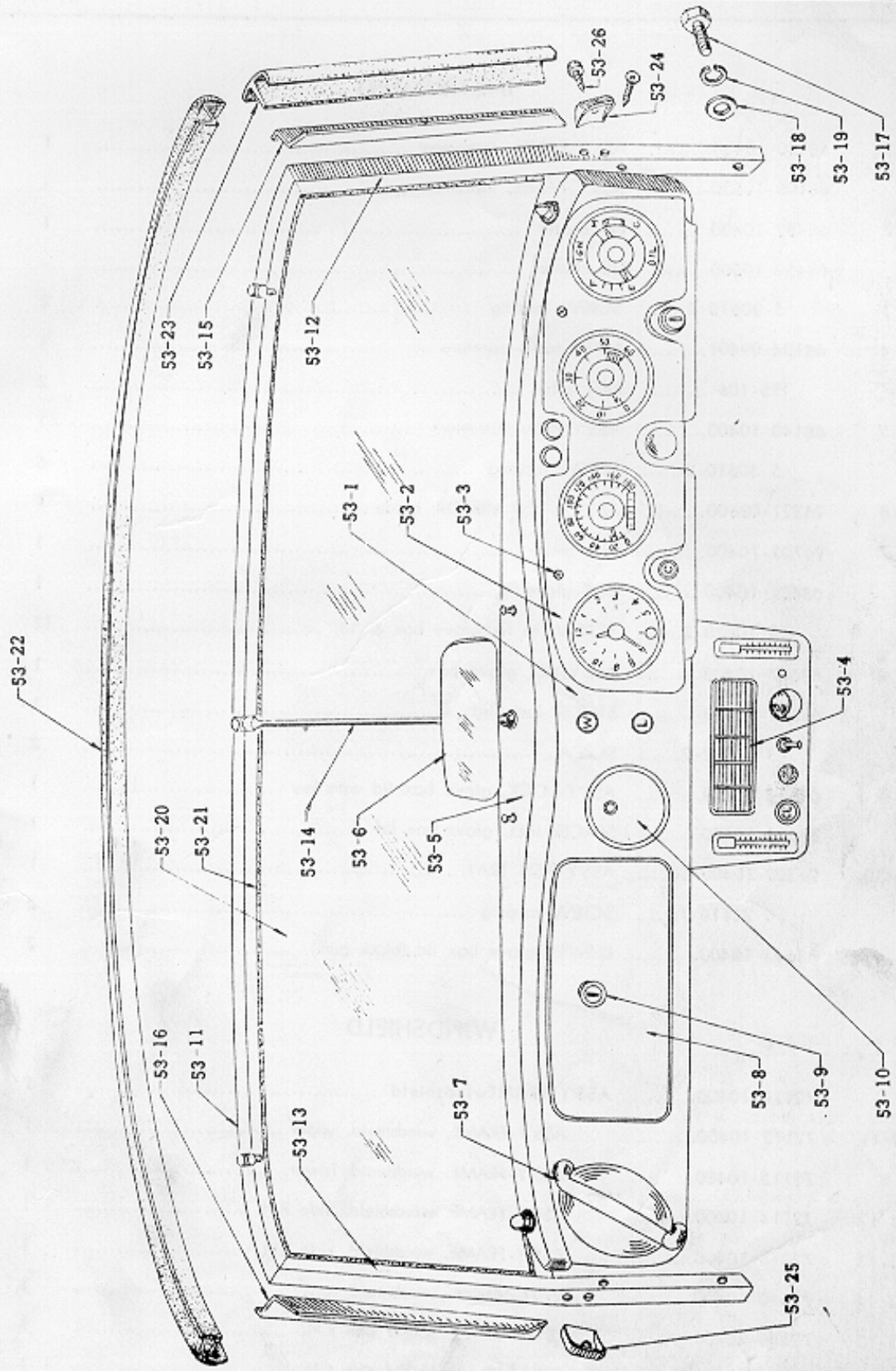

ILL. NO.	PART NO.	PART NAME	Q'TY PER SECTION SP310	Q'TY PER SECTION SPL310

INSTRUMENT

53-1	○ 68100-10430.....	ASS'Y-PANEL, instrument	1	-
	○ 68100-10530.....	ASS'Y-PANEL, instrument	-	1
53-2	○ 68452-10400.....	LID-cluster	1	-
	○ 68452-10500.....	LID-cluster	-	1
53-3	5-30610-2.....	SCREW-tapping	2	2
53-4	68134-09401.....	MASK-radio aperture	1	1
	PFS-106	NUT-spire	2	2
53-5	○ 68140-10400.....	ASS'Y-PAD, instrument	1	1
	5-30610-2.....	SCREW-tapping	6	6
53-6	96321-08600.....	ASS'Y-BACK MIRROR, inside	1	1
53-7	○ 96702-10400.....	RAIL-assist	1	1
	○ 68601-10400.....	BOX-glove	1	1
	5-10810-2.....	SCREW (to fix glove box & lid)	12	12
53-8	○ 68607-10400.....	ASS'Y-LID, glove box	1	1
	○ 68639-10400.....	STRIKER-lock, lid	1	1
	3-14012-2.....	SCREW	2	2
53-9	68630-32202.....	ASS'Y-LOCK, glove box lid with key	1	1
	○ 68638-10400.....	SPACER-lock, glove box lid	1	1
53-10	○ 96500-10400.....	ASS'Y-ASH TRAY	1	1
	5-20610-1.....	SCREW-tapping	2	2
	○ 68643-10400.....	BUMPER-glove box lid (black gum)	2	2

WINDSHIELD

	○ 72110-10400.....	**ASS'Y-FRAME windshield**	1	1
53-11	○ 72112-10400.....	ASS'Y-FRAME, windshield, upper	1	1
	○ 72113-10400.....	ASS'Y-FRAME, windshield, lower	1	1
53-12	○ 72114-10400.....	ASS'Y-FRAME, wiudshield, side R.H.	1	1
53-13	○ 72115-10400.....	ASS'Y-FRAME, windshield, side L.H.	1	1
53-14	○ 72510-10400.....	WIRE-tension, windshield	1	1
53-15	○ 72145-10400.....	RETAINER-windshield side R.H.	1	1
53-16	○ 72146-10400.....	RETAINER-windshield side L.H.	1	1

INSTRUMENT & WINDSHIELD FITTING

Fig. 53

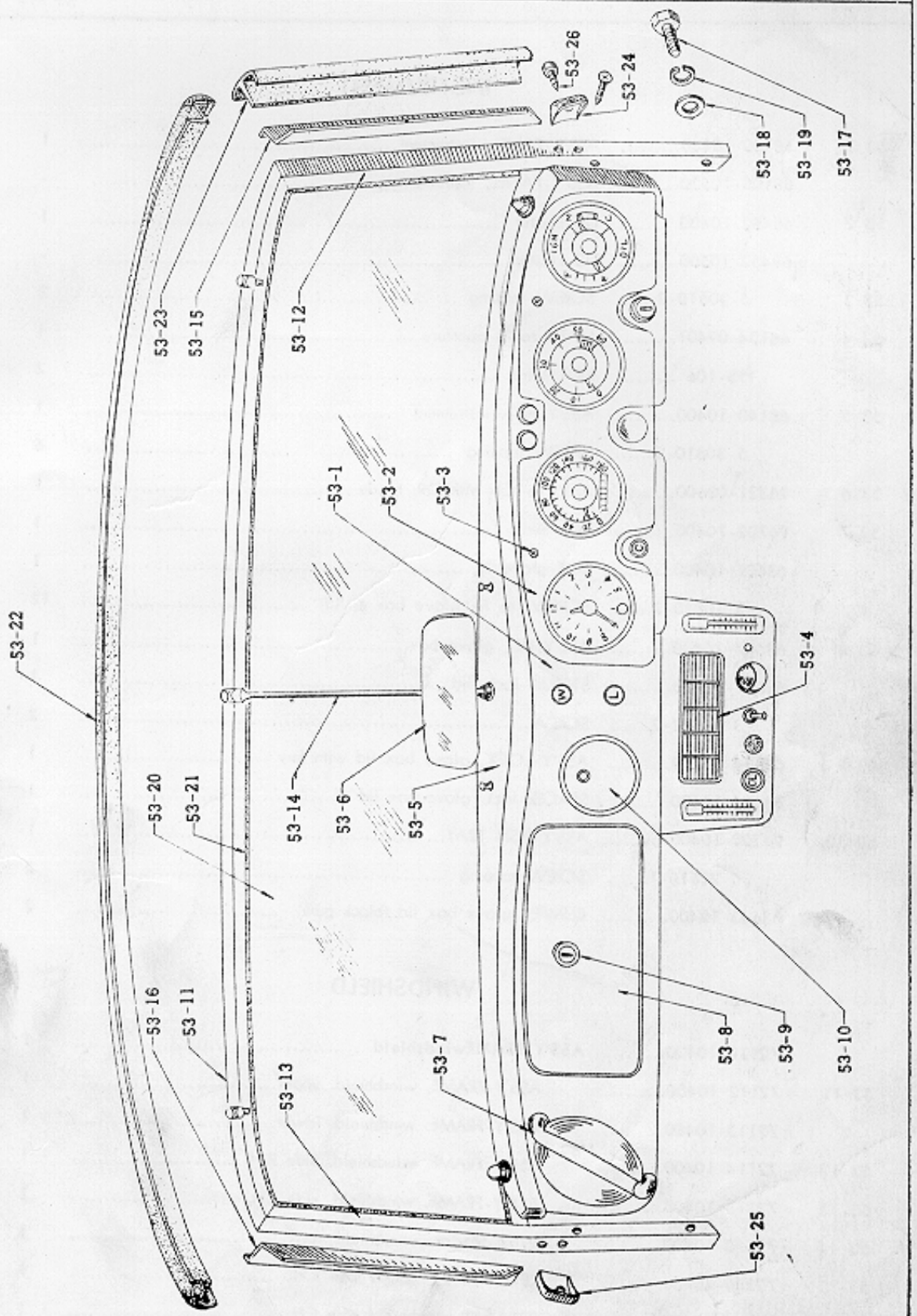

ILL. NO.	PART NO.	PART NAME	Q'TY PER SECTION SP310	Q'TY PER SECTION SPL310

INSTRUMENT

53-1	○ 68100-10430.....	ASS'Y-PANEL, instrument	1	-
	○ 68100-10530.....	ASS'Y-PANEL, instrument	-	1
53-2	○ 68452-10400.....	LID-cluster	1	-
	○ 68452-10500.....	LID-cluster	-	1
53-3	5-30610-2.....	SCREW-tapping	2	2
53-4	68134-09401.....	MASK-radio aperture	1	1
	PFS-106	NUT-spire	2	2
53-5	○ 68140-10400.....	ASS'Y-PAD, instrument	1	1
	5-30610-2.....	SCREW-tapping	6	6
53-6	96321-08600.....	ASS'Y-BACK MIRROR, inside	1	1
53-7	○ 96702-10400.....	RAIL-assist	1	1
	○ 68601-10400.....	BOX-glove	1	1
	5-10810-2.....	SCREW (to fix glove box & lid)	12	12
53-8	○ 68607-10400.....	ASS'Y-LID, glove box	1	1
	○ 68639-10400.....	STRIKER-lock, lid	1	1
	3-14012-2.....	SCREW	2	2
53-9	68630-32202.....	ASS'Y-LOCK, glove box lid with key	1	1
	○ 68638-10400.....	SPACER-lock, glove box lid	1	1
53-10	○ 96500-10400.....	ASS'Y-ASH TRAY	1	1
	5-20610-1.....	SCREW-tapping	2	2
	○ 68643-10400.....	BUMPER-glove box lid (black gum)	2	2

WINDSHIELD

	○ 72110-10400.....	**ASS'Y-FRAMEwindshield**	1	1
53-11	○ 72112-10400.....	ASS'Y-FRAME, windshield, upper	1	1
	○ 72113-10400.....	ASS'Y-FRAME, windshield, lower	1	1
53-12	○ 72114-10400.....	ASS'Y-FRAME, wiudshield, side R.H.	1	1
53-13	○ 72115-10400.....	ASS'Y-FRAME, windshield, side L.H.	1	1
53-14	○ 72510-10400.....	WIRE-tension, windshield	1	1
53-15	○ 72145-10400.....	RETAINER-windshield side R.H.	1	1
53-16	○ 72146-10400.....	RETAINER-windshield side L.H.	1	1

ILL. NO.	PART NO.	PART NAME		Q'TY PER SECTION SP310	SPL310
	3-20812-1.....	SCREW	.....	10	10
53-17	1-14530-1.....	BOLT	.....	4	4
53-18	9-15415-1.....	WASHER-plain	to fix cowl side	4	4
53-19	9-15115-1.....	WASHES-lock	.....	4	4
	9-11144-1.....	NUT	.....	4	4
	9-15414-1.....	WASHER-plain	to fix cowl top	4	4
	9-15114.....	WASHER-lock	.....	4	4

WINDSHIELD GLASS & WEATHERSTRIP

53-20	72613-10400.....	GLASS-windshield	.....	1	-
	72613-10500.....	GLASS-windshield	.....	U-1	1
53-21	72610-10401.....	WEATHERSTRIP-windshield, inside (black gum)	.....	1	1
53-22	72620-10401.....	WEATHERSTRIP-windshield outside (black gum)	.....	1	1
53-23	72801-10400.....	WEATHERSTRIP-windshield, side (black gum)	.....	2	2
53-24	72811-10401.....	RETAINER-weatherstrip R.H.	.....	1	1
53-25	72812-10401.....	RETAINER-weatherstrip L.H.	.....	1	1
53-26	5-10607-1.....	SCREW	.....	4	4
	72905-10400.....	TRIM-W/S side R.H.	.....	1	1
	72906-10400.....	TRIM-W/S side L.H.	.....	1	1

FLOOR FITTING

Fig. 54

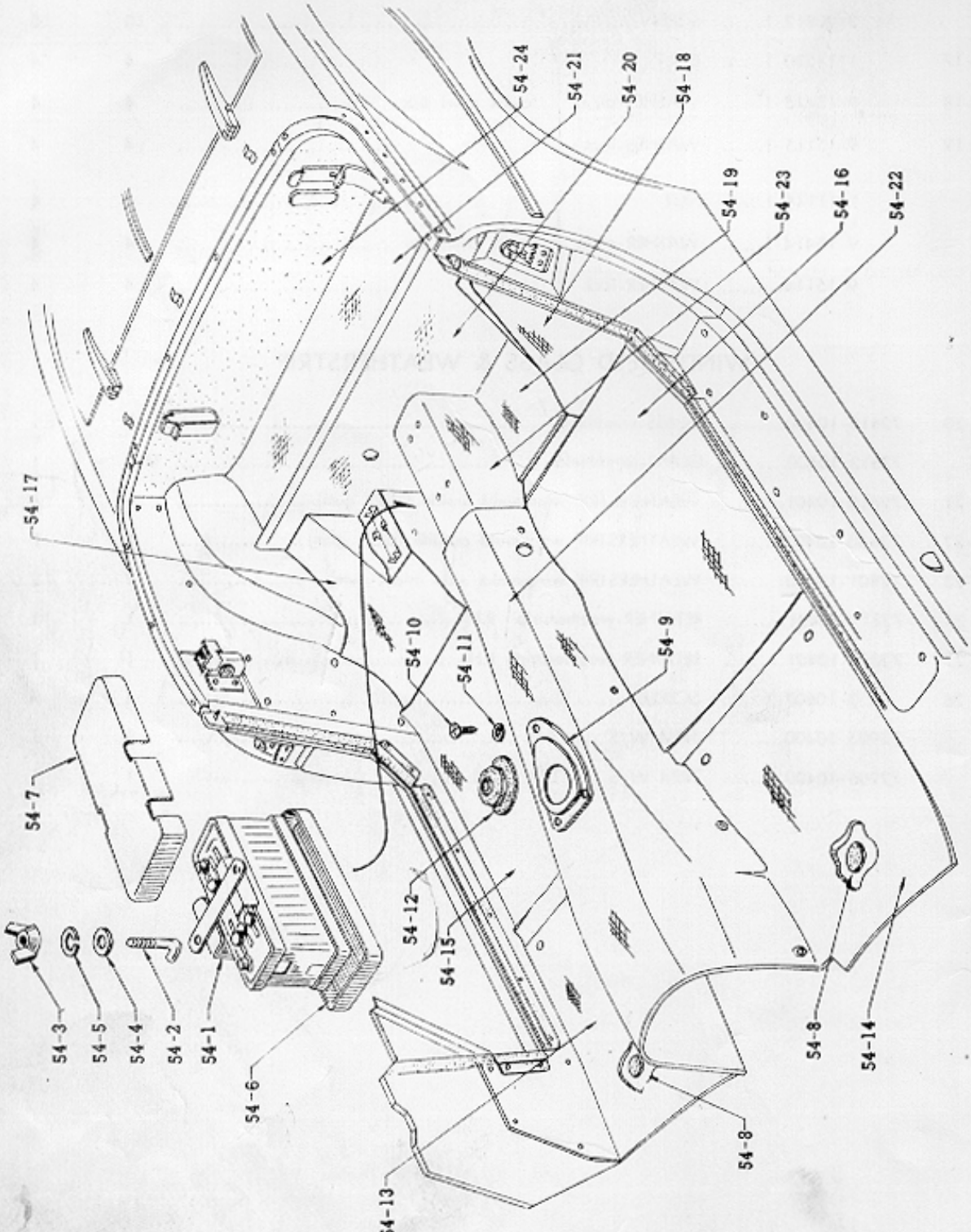

ILL. NO.	PART NO.	PART NAME	Q'TY PER SECTION SP310	Q'TY PER SECTION SPL310

FLOOR FITTING

54-1	○ 24420-10400.....	ASS'Y-SUPPORT, battery	1	1
54-2	○ 24423-10400.....	ROD-battery support	2	2
54-3	9-13444-1.....	NUT-wing "A"	2	2
54-4	● 9-15414-1.....	WASHER-plain	2	2
54-5	9-15114-1.....	WASHER-lock	2	2
54-6	○ 24423-09400.....	TRAY-battery	1	1
54-7	○ 24425-10400.....	COVER-battery	1	1
54-8	○ 74942-10400.....	PLUG-rubber	3	3
54-9	○ 74760-10400.....	COVER-tunnel, control lever	1	1
54-10	3-14412-2.....	SCREW } to fix floor	3	3
54-11	9-15414-2.....	WASHER-plain }	3	3
54-12	32869-03200.....	DUST SHIELD-change lever	1	1
54-13	○ 74921-10400.....	TRIM-floor "A" R.H.	1	1
54-14	○ 74922-10400.....	TRIM-floor "A" L.H.	1	1
54-15	○ 74923-10400.....	TRIM-floor "B" R.H.	1	1
54-16	○ 74924-10400.....	TRIM-floor "B" L.H.	1	1
54-17	○ 74925-10400.....	TRIM-floor "C" R.H.	1	1
54-18	○ 74926-10400.....	TRIM-floor "C" L.H.	1	1
54-19	○ 74927-10400.....	TRIM-floor "D"	1	1
54-20	○ 74928-10400.....	TRIM-floor "E"	1	1
54-21	○ 74929-10400.....	TRIM-floor "F"	1	1
54-22	○ 74930-10400.....	TRIM-tunnel, front	1	1
54-23	○ 74931-10400.....	TRIM-tunnel, rear	1	1
54-24	○ 79901-10400.....	TRIM-tunnel, end	1	1
	○ 99950-10400.....	COVER-hand brake lever	1	1

BODY SIDE FITTING

Fig. 55

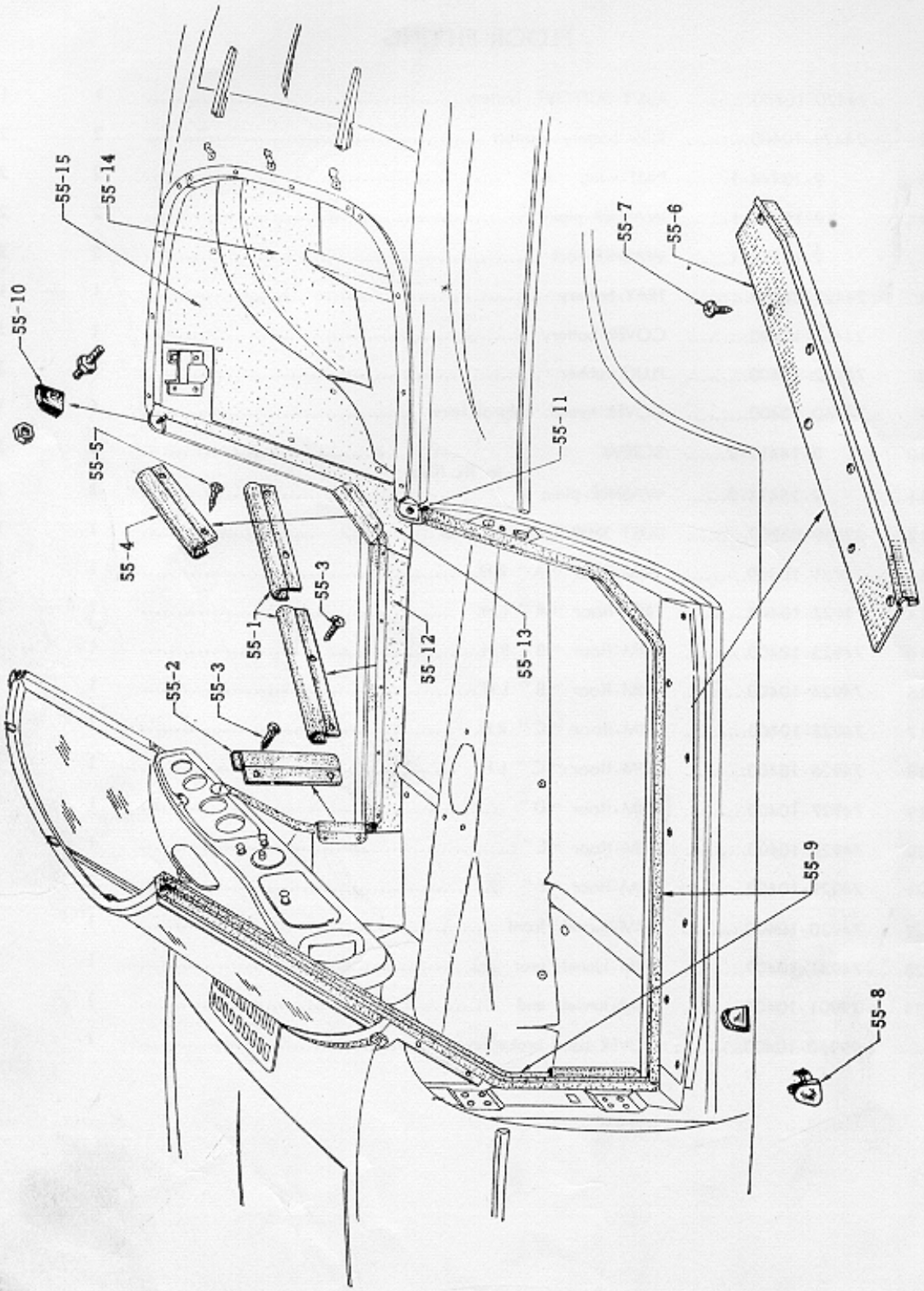

ILL. NO.	PART NO.	PART NAME	Q'TY PER SECTION SP310	Q'TY PER SECTION SPL310

BODY SIDE FITTING

55-1	○ 74932-10400.....	PLATE-scuff	2	2
55-2	○ 74934-10400.....	PLATE-scuff, front	2	2
55-3	5-10607-2.....	SCREW-tapping	14	14
55-4	○ 74933-10400.....	PLATE-scuff, rear	2	2
55-5	5-10607-2.....	SCREW-tapping	4	4
55-6	○ 74935-10400.....	PLATE-kicking, sill outer	2	2
55-7	5-10608-2.....	SCREW-tapping	14	14
55-8	○ 76419-10400.....	COVER-jack hole	2	2
55-9	○ 76802-10400.....	WEATHERSTRIP-door	2	2
55-10	○ 76810-10400.....	CAP-top, lock piller R.H.	1	1
55-11	○ 76811-10400.....	CAP-top, lock piller L.H.	1	1
55-12	○ 76901-10400.....	TRIM-sill R.H. (red)	1	1
	○ 76901-10401.....	TRIM-sill R.H. (black)	1	1
	○ 76902-10400.....	TRIM-sill L.H. (red)	1	1
	○ 76902-10401.....	TRIM-sill L.H. (black)	1	1
55-13	○ 76903-10400.....	TRIM-piller R.H. (red)	1	1
	○ 76903-10401.....	TRIM-sill L.H. (black)	1	1
	○ 76904-10400.....	TRIM-piller L.H. (red)	1	1
	○ 76904-10401.....	TRIM-piller L.H. (black)	1	1
55-14	○ 76905-10400.....	TRIM-wheel house R.H. (red)	1	1
	○ 76905-10401.....	TRIM-wheel house R.H. (black)	1	1
	○ 26906-10400.....	TRIM-wheelhouse L.(red)	1	1
	○ 76906-10401.....	TRIM-wheel house, L.H. (black)	1	1
55-15	○ 76921-10400.....	TRIM-quarter R.H. (red)	1	1
	○ 76921-10401.....	TRIM-quarter, R.H. (black)	1	1
	○ 76922-10400.....	TRIM-quarter, L.H. (red)	1	1
	○ 76922-10401.....	TRIM-quarter, L.H. (black)	1	1

DOOR (1) Fig. 56

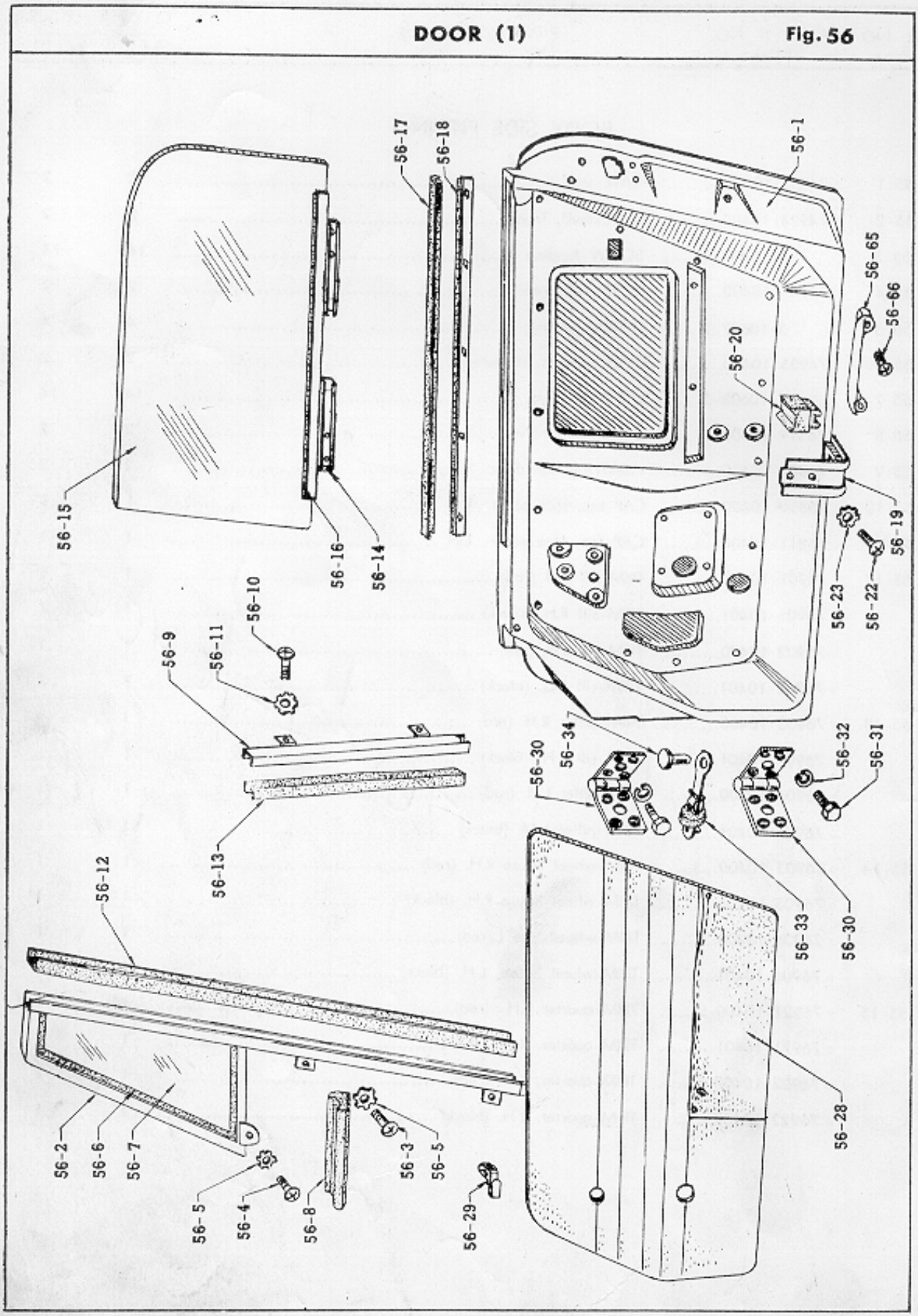
56-1
56-2
56-3
56-4
56-5
56-6
56-7
56-8
56-9
56-10
56-11
56-12
56-13
56-14
56-15
56-16
56-17
56-18
56-19
56-20
56-22
56-23
56-28
56-29
56-30
56-31
56-32
56-33
56-34
56-65
56-66

DOOR (2)

Fig. 56-A

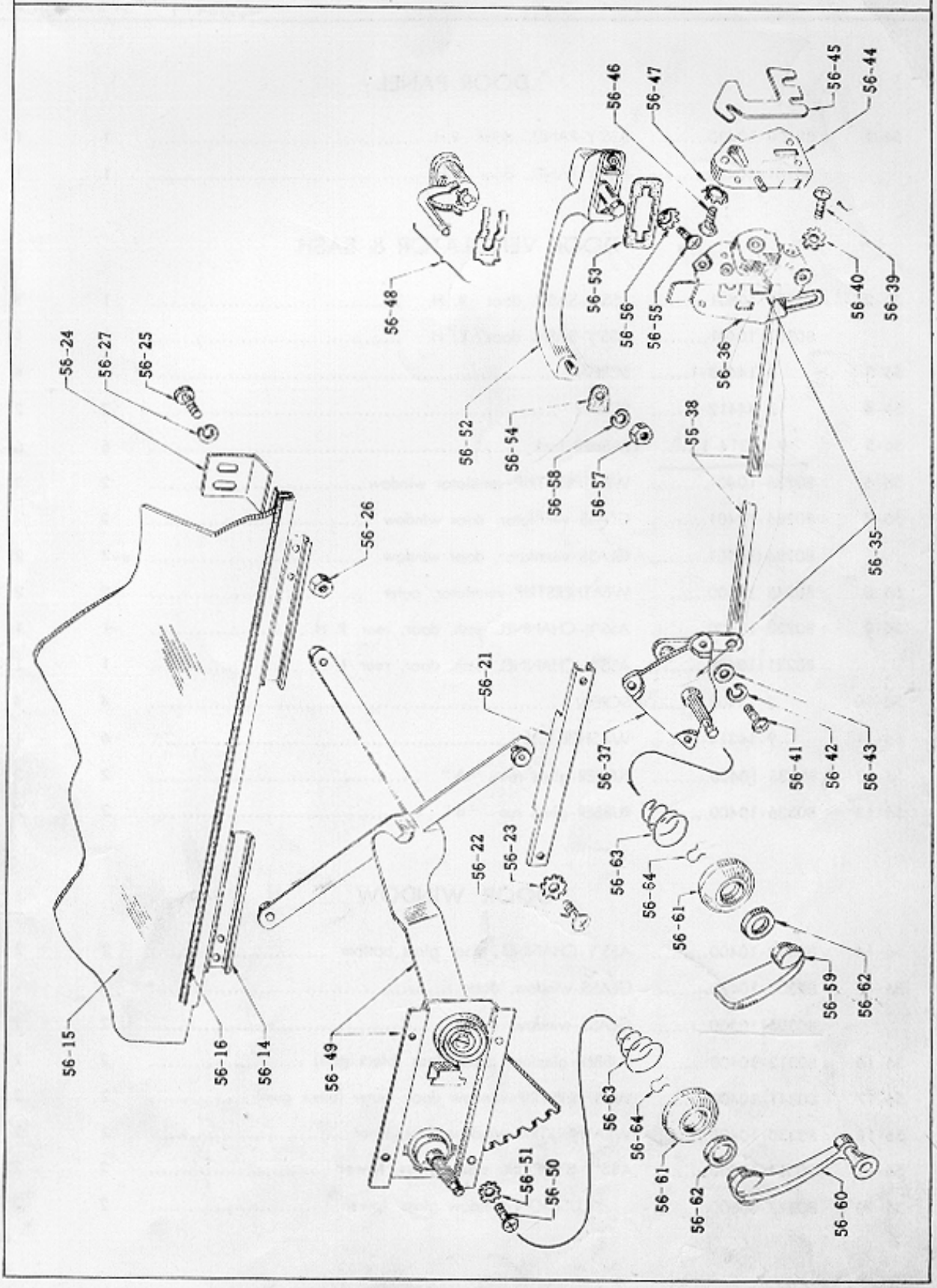

ILL. NO.	PART NO.	PART NAME	Q'TY PER SECTION SP310	SPL310

DOOR PANEL

56-1	○ 80100-10430.....	ASS'Y-PANEL, door R.H.	1	1
	○ 80101-10430.....	ASS'Y-PANEL, door L.H.	1	1

DOOR VENTILATOR & SASH

56-2	○ 80200-10401.....	ASS'Y-SASH, door R. H.	1	1
	○ 80201-10401.....	ASS'Y-SASH, door L. H.	1	1
56-3	3-14408-1.....	SCREW	4	4
56-4	3-44412-2.....	SCREW	2	2
56-5	9-16314-1.....	WASHER-lock	6	6
56-6	○ 80226-10401.....	WEATHERSTRIP-ventilator window	2	2
56-7	○ 80286-10401.....	GLASS-ventilator, door window	2	-
	○ 80286-10501.....	GLASS-ventilator, door window	U-2	2
56-8	○ 80245-10400.....	WEATHERSTRIP-ventilator, outer	2	2
56-9	○ 80220-10400.....	ASS'Y-CHANNEL, sash, door, rear R. H.	1	1
	○ 80221-10400.....	ASS'Y-CHANNEL, sash, door, rear L. H.	1	1
56-10	3-14408-1.....	SCREW	4	4
56-11	9-16314-1.....	WASHER-lock	4	4
56-12	○ 80335-10400.....	RUBBER-glass run "A"	2	2
56-13	○ 80336-10400.....	RUBBER-glass run "B"	2	2

DOOR WINDOW

56-14	○ 80302-10400.....	ASS'Y-CHANNEL, door glass bottom	2	2
56-15	○ 80306-10400.....	GLASS-window, door	2	-
	○ 80306-10500.....	GLASS-window, door	U-2	2
56-16	○ 80312-10400.....	RUBBER-glazing, glass, door (black gum)	2	2
56-17	○ 80341-10400.....	WEATHERSTRIP-window door, outer (black gum)	2	2
56-18	○ 80330-10400.....	WEATHERSTRIP-window door, inner	2	2
56-19	○ 80314-10400.....	**ASS'Y-STOPPER, door glass, tower**	2	2
56-20	80317-00800.....	CUSHION-window glass, lower	2	2

ILL. NO.	PART NO.	PART NAME	Q'TY PER SECTION SP310	SPL310
56-21	○ 80308-10400.....	ASS'Y-GUIDE RAIL, regulator	2	2
56-22	3-14412-1.....	SCREW } to fix stopper & guide rail	8	8
56-23	9-16314-1.....	WASHER-lock }	8	8
56-24	○ 80316-10400.....	ANGLE-stopper, door window	2	2
56-25	3-14412-1.....	SCREW	4	4
56-26	9-11144-1.....	NUT	4	4
56-27	9-15114-1.....	WASHER-lock	4	4

DOOR TRIM

56-28	○ 80950-10400.....	TRIM-door, front R.H. (red)	1	1
	○ 80951-10400.....	TRIM-door, front L.H. (red)	1	1
	○ 80950-10401.....	TRIM-door, rear R.H. (black).....	1	1
	○ 80951-10401.....	TRIM-door, rear L.H. (black).....	1	1
56-29	80919-32200.....	CLLIP-trim pad.....	28	28
	○ 80801-10400.....	ASS'Y-SIDE FLASH, door R.H.	1	1
	○ 80802-10400.....	ASS'Y-SIDE FLASH, door L.H.	1	1

MLDG

DOOR HINGE & CHECK LINK

56-30	○ 80400-10400.....	ASS'Y-HINGE, door	4	4
56-31	1-14416-1.....	BOLT	32	32
56-32	9-15114-1.....	WASHER-lock	32	32
56-33	○ 80410-10400.....	ASS'Y-LINK, door check	2	2
56-34	○ 82451-30000.....	RIVET (to fix link)	2	2

ILL. NO.	PART NO.	PART NAME	Q'TY PER SECTION SP310	Q'TY PER SECTION SPL310

DOOR LOOK, STRIKER & REGULATOR

56-35	○ 80500-10400.....	**ASS'Y-LOCK & REMOTE CONTROL, door R.H.**	1	1
56-36	○ 80502-10400.....	ASS'Y-LOCK, door R.H.	1	1
56-37	○ 80504-10400.....	ASS'Y-REMOTE CONTROL, door lock	1	1
56-38	○ 80565-10400.....	LINK-door lock & remote control R.H.	1	1
	80545-35000.....	RIVET-link,	1	1
	80546-35000.....	WASHER-wave, link	1	1
56-39	3-24012-1.....	SCREW } lock to door	3	3
56-40	9-16410-1.....	WASHER-lock } lock to door	3	3
56-41	3-14008-1.....	SCREW	3	3
56-42	9-15110-1.....	WASHER-lock } remote control to door	3	3
56-43	9-15410-1.....	WASHER-plain } remote control to door	3	3
	○ 80501-10400.....	**ASS'Y-LOCK & REMOTE CONTROL, door L.H.**	1	1
	○ 80503-10400.....	ASS'Y-LOCK, door L.H.	1	1
	○ 80504-10400.....	ASS'Y-REMOTE CONTROL, door lock	1	1
	○ 80566-10400.....	LINK-door lock & remote contral L.H.	1	1
	80545-35000.....	RIVET-link, flat head	1	1
	80546-35000.....	WASHER-wave, link	1	1
	3-24012-1.....	SCREW } lock to door	3	3
	9-16410-1.....	WASHER-lock } lock to door	3	3
	3-14008-1.....	SCREW } remote control to door	3	3
	9-15110-1.....	WASHER-lock } remote control to door	3	3
56-44	80570-35001.....	ASS'Y-STRIKER, door lock R.H.	1	1
	80571-35001.....	ASS'Y-STRIKER, door lock L.H.	1	1
56-45	80630-35000.....	SHIM-adjusting, door lock striker	2	2
56-46	3-24430-1.....	SCREW } striker to pillar	6	6
56-47	9-16414-1.....	WASHER-lock } striker to pillar	6	6
56-48	○ 80600-10400.....	ASS'Y-CYLINDER, door lock R.H.	1	1
	○ 80601-10400.....	ASS'Y-CYLINDER, door lock L.H.	1	1
56-49	○ 80700-10400.....	ASS'Y-REGULATOR, door window R.H.	1	1
	○ 80701-10400.....	ASS'Y-REGULATOR, door window L.H.	1	1
56-50	3-14412-1.....	SCREW	8	8
56-51	9-16414-1.....	WASHER-lock	8	8

ILL. NO.	PART NO.	PART NAME	Q'TY PER SECTION SP310	Q'TY PER SECTION SPL310
		DOOR HANDLE		
56-52	80675-04100.....	HANDLE-door, outside	2	2
56-53	80685-04100.....	WASHER-seating, door handle outside, large	2	2
56-54	80686-04100.....	WASHER-seating, door handle outside, small	2	2
56-55	3-14010-1.....	SCREW.....	2	2
56-56	9-16310-1.....	WASHER-lock	2	2
56-57	9-11140-1.....	NUT	2	2
56-58	9-15110-1.....	WASHER-lock	2	2
56-59	80672-~~32200-~~ 1 0602	HANDLE-door, inside (Zn die cast)	2	2
56-60	80760-32200.....	ASS'Y-HANDLE, door window regulator	2	2
56-61	○ 80675-10400.....	ESCUTCHEON-door handle	4	4
56-62	○ 80676-10400.....	CROWN-escutcheon	4	4
56-63	80674-33100.....	SPRING-escutcheon	4	4
56-64	80673-32200.....	SPRING-retaining, handle	4	4
56-65	80691-26261.....	HANDLE-pull	2	2
56-66	3-14012-2.....	SCREW	4	4
		PRIVATE LOCK & KEY		
	80010-10450.....	SET-CYLINDE LOCK & KEY	1	1
		INCLUDING		
		ASS'Y-KEY with holder		
		ASS'Y-LOCK, glove box lid		
		ASS'Y-HANDLE, trunk lid pith cylinder		
		COMPLETE-SWITCH, ignition & starter		
		ASS'Y-CYLINDER, door lock R.H.		
		ASS'Y-CYLINDER, door lock L.H.		
		ASS'Y-CAP, filler		
		CLIP-retaining, cylinder door lock		
		PACKING-trunk lid handle		

BODY REAR

Fig. 57

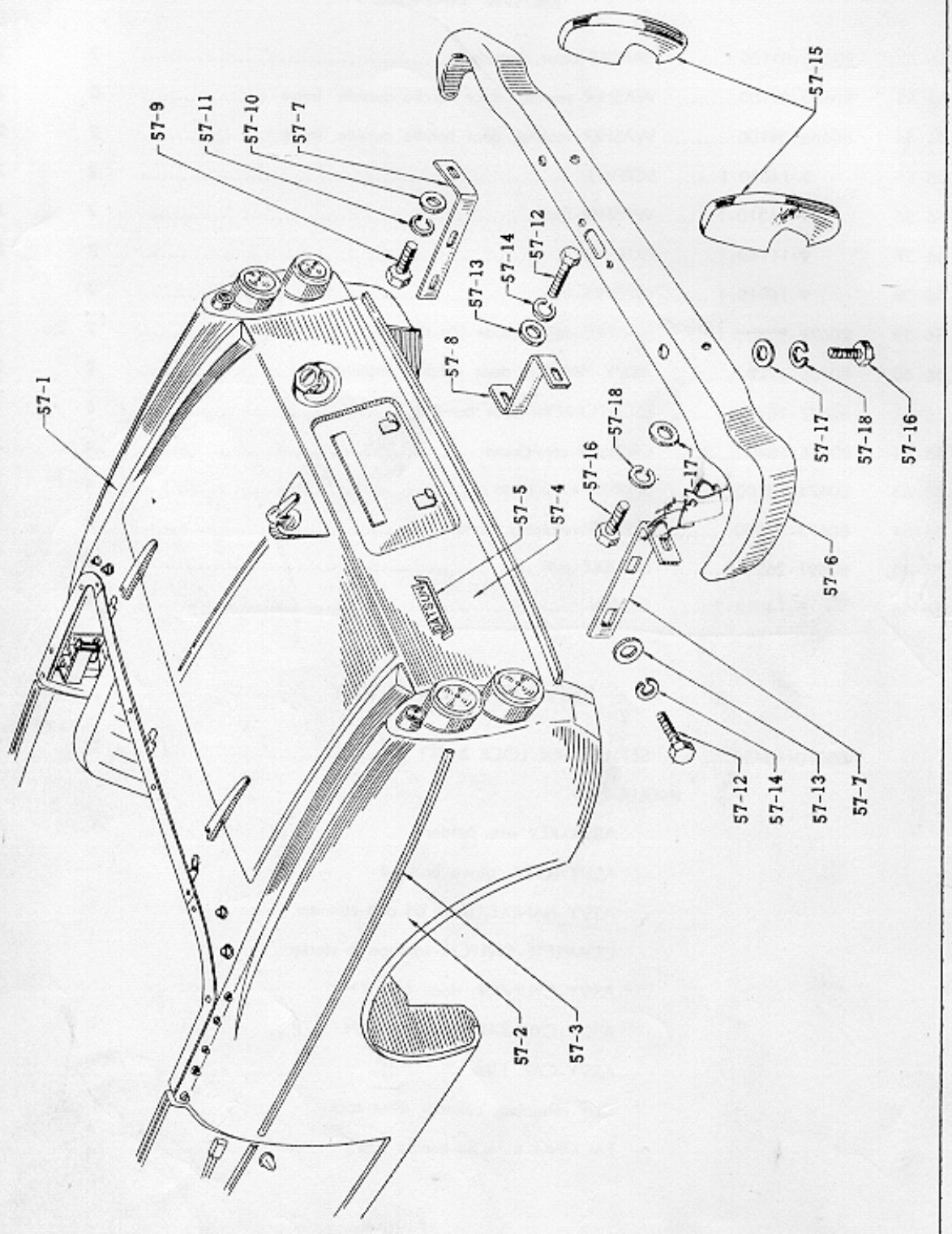

ILL. NO.	PART NO.	PART NAME	Q'TY PER SECTION SP310	Q'TY PER SECTION SPL310
		REAR FENDER & BACK PANEL		
57-1	○ 78100-10530	ASS'Y-FENDER, rear R.H.	1	1
57-2	○ 78101-10530	ASS'Y-FENDER, rear L.H.	1	1
	○ 78201-10400	ASS'Y-SIDE FLASH, rear fender R.H.	1	1
57-3	○ 78202-10400	ASS'Y-SIDE FLASH, rear fender L.H.	1	1
	97331-04100	WASHER-rubber (black rubber)	12	12
57-4	○ 79100-10400	ASS'Y-PANEL, rear	1	1
57-5	○ 65801-10400	EMBLEM-trunk lid	1	1
	PFS-106	NUT-spire	3	3
		REAR BUMPER		
	○ 85002-10400	ASS'Y-BUMPER, rear	1	1
57-6	○ 85002-10401	ASS'Y-BUMPER, rear	J-1 U-1	1
57-7	○ 85200-10400	STAY-rear bumper, side	2	2
57-8	○ 85201-10400	STAY-rear bumper, center	1	1
57-9	1-14620-1	BOLT	3	3
57-10	9-15416-1	WASHER-plain (bumper to stay)	3	3
57-11	9-15116-1	WASHER-lock	3	3
57-12	1-14625-1	BOLT	5	5
57-13	9-15416-1	WASHER-plain (stay to frame)	5	5
57-14	9-15116-1	WASHER-lock	5	5
57-15	62663-10401	ASS'Y-OVERRIDER	U-2	2
57-16	1-14516-1	BOLT	4	4
57-17	9-15415-1	WASHER-plain	4	4
57-18	9-15115-1	WASHER-lock	4	4

TRUNK FITTING

Fig. 58

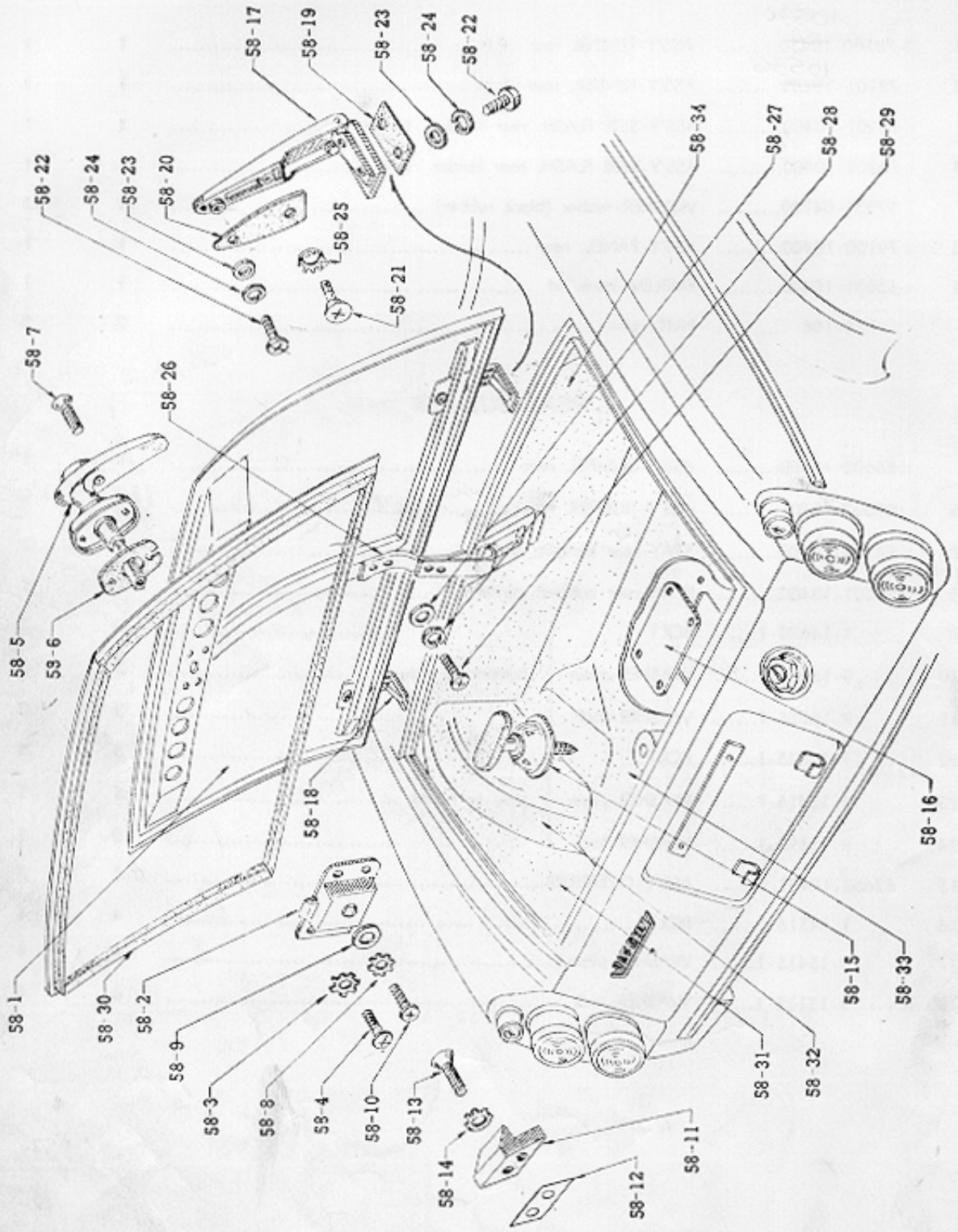

ILL. NO.	PART NO.	PART NAME	Q'TY PER SECTION SP310	Q'TY PER SECTION SPL310
		TRUNK LID		
58-1	○ 84300-10430	ASS'Y-PANEL, trunk lid	1	1
58-2	84430-25760	ASS'Y-LOCK, trunk lid	1	1
58-3	9-16314-1	WASHER-lock, to fix lock ass'y	4	4
58-4	3-14410-1	SCREW, to fix lock ass'y	4	4
58-5	○ 84450-10400	ASS'Y-HANDLE, trunk lid with cylinder lock	1	1
58-6	84460-25760	PACKING-trunk lid handle	1	1
58-7	3-34014-2	SCREW, to fix handle	2	2
58-8	9-16310-1	WASHER-lock, to fix handle	1	1
58-9	9-15412-1	WASHER-plain, to fix handle	1	1
58-10	3-14012-1	SCREW, to fix handle	1	1
58-11	○ 84474-10400	STRIKER-lock, trunk lid, to fix handle	1	1
58-12	○ 84475-10400	SHIM-striker, trunk lid lock	1	1
58-13	3-24418-1	SCREW, to fix striker	2	2
58-14	9-16414-1	WASHER-lock, to fix striker	2	2
		TRUNK FITTING		
58-15	57235-04151	ASS'Y,-BOLT-clamp, spare tire	1	1
58-16	○ 84120-10400	ASS'Y-COVER, inspection hole	1	1
58-17	○ 84403-10400	ASS'Y-HINGE, trunk lid R.H.	1	1
58-18	○ 84404-10400	ASS'Y-HINGE, trunk lid L.H.	1	1
58-19	84410-04100	SHIM-hinge, trunk lid, male (rubber)	2	2
58-20	84411-04100	SHIM-hinge, trunk lid, female (rubber)	2	2
58-21	3-24412-1	SCREW	2	2
58-22	3-14412-1	SCREW	6	6
58-23	9-15514-1	WASHER-plain	6	6
58-24	9-15114-1	WASHER-lock	6	6
58-25	9-16414-1	WASHER-lock	2	2

ILL. NO.	PART NO.	PART NAME	Q'TY PER SECTION SP310	Q'TY PER SECTION SPL310
58-26	◦ 84480-10400.....	ASS'Y-SUPPORT, trunk lid	1	1
58-27	9-15410-1.....	WASHER-plain	2	2
58-28	9-15114.....	WASHER-lock	2	2
58-29	3-14412-1.....	SCREW	2	2
58-30	◦ 84806-10400.....	WEATHERSTRIP-trunk lid	1	1
	◦ 76910-10400.....	INSULATOR-rear fender R.H. (red)	1	1
	◦ 76910-10401.....	INSULATOR-rear fender R.H. (black)	1	1
58-31	◦ 76911-10400.....	INSULATOR-rear fender L.H. (red)	1	1
	◦ 76911-10401.....	INSULATOR-rear fender L.H. (black)	1	1
	◦ 76923-10400.....	TRIM-wheel house, rear R.H. (red)	1	1
	◦ 76923-10401.....	TRIM-wheel house, rear R.H. (black)	1	1
58-32	◦ 76924-10400.....	TRIM-wheel house, rear L.H. (red)	1	1
	◦ 76924-10400.....	TRIM-wheel house, rear L.H. (black)	1	1
58-33	◦ 84901-10400.....	TRIM-trunk floor, front	1	1
58-34	◦ 84902-10400.....	TRIM-trunk floor, rear	1	1
	◦ 57901-10400.....	COVER-spare tire	1	1

FRONT SEAT

Fig. 59

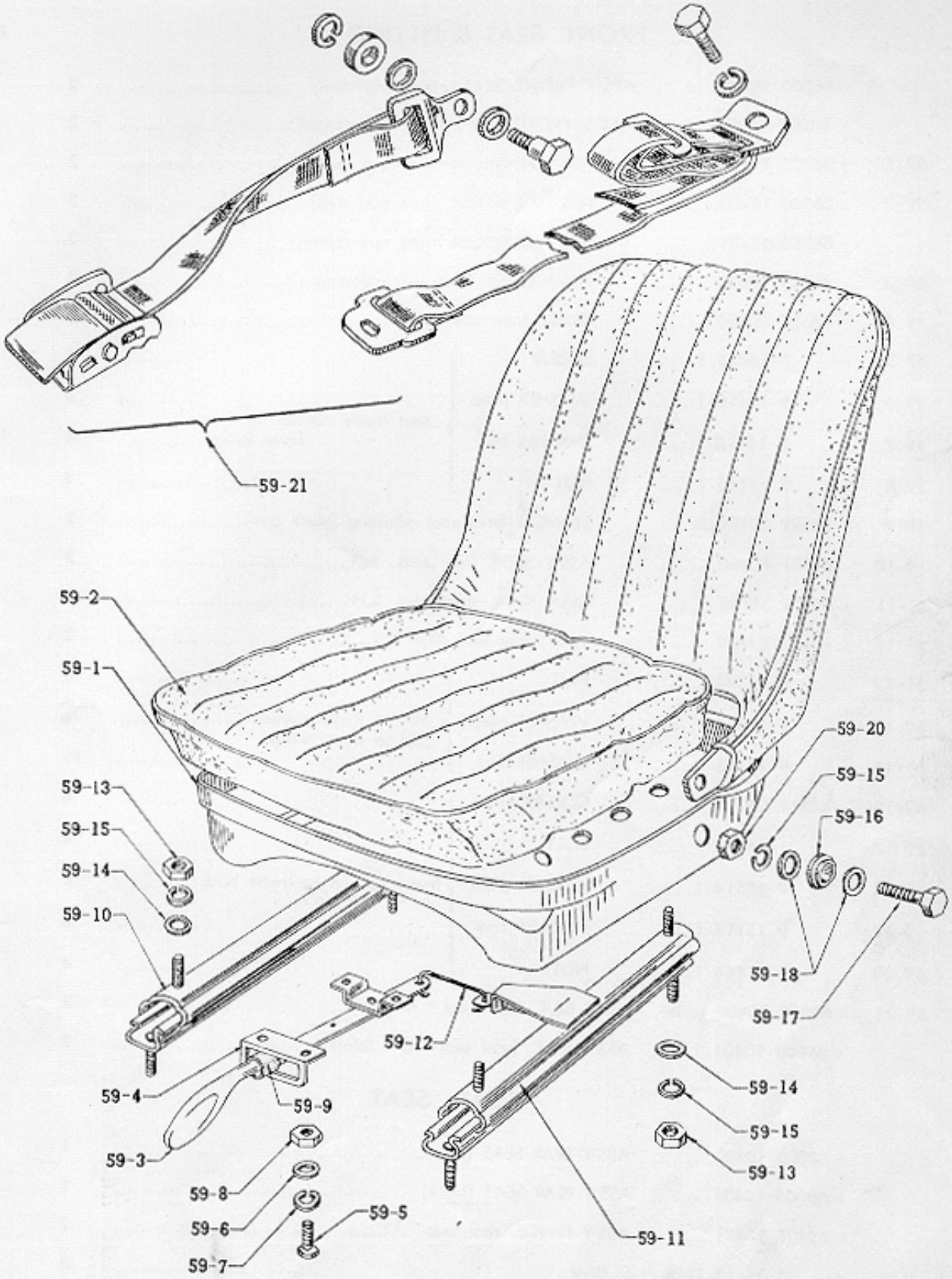

ILL. NO.	PART NO.	PART NAME	Q'TY PER SECTION SP310	Q'TY PER SECTION SPL310

FRONT SEAT & FITTING

	○ 86000-10400.....	**ASS'Y-FRONT SEAT with slide (red)**	2	2
	○ 86000-10401.....	**ASS'Y-FRONT SEAT with slide (black)**	2	2
59-1	○ 86102-10400.....	ASS'Y-FRAME, cushion front seat	2	2
59-2	○ 86300-10400.....	ASS'Y-CUSHION, front seat (red)	2	2
	○ 86300-10401.....	ASS'Y-CUSHION, front seat (black)	2	2
59-3	○ 86522-10400.....	ASS'Y-LEVER, front seat adjusting	2	2
59-4	86527-00100.....	GUIDE-front seat adjust	2	2
59-5	3-14016-1.....	SCREW	4	4
59-6	9-15410-1.....	WASHER-plain	4	4
59-7	9-15110-1.....	WASHER-lock seat frame cushion to lever fixing	4	4
59-8	9-11140-1.....	NUT	4	4
59-9	86529-00100.....	SILENCER-front seat adjusting (black gum)	2	2
59-10	○ 86501-10400.....	ASS'Y-SLIDE, front seat R.H.	2	2
59-11	○ 86502-36700.....	ASS'Y-SLIDE, front seat L.H.	2	2
59-12	86532-04700.....	WIRE-front seat slide lock	2	2
59-13	9-11145-1.....	NUT	16	16
59-14	9-15415-1.....	WASHER-plain slid to frame cushion	16	16
59-15	9-15115-1.....	WASHER-lock slid to floor fixing	16	16
59-16	86511-04700.....	COLLAR-hinge	4	4
59-17	1-14422-1.....	BOLT	4	4
59-18	9-15514-1.....	WASHER-plain frame cushion to frame back	8	8
59-19	9-15114-1.....	WASHER-lock	4	4
59-20	9-11144-1.....	NUT	4	4
59-21	○ 86800-10400.....	ASS'Y-BELT, front seat "A" (red)	2	2
	○ 86800-10401.....	ASS'Y-BELT, front seat "G" (black)	2	2

REAR SEAT

	○ 88000-10400.....	ASS'Y-REAR SEAT (red)	1	1
	○ 88000-10401.....	ASS'Y-REAR SEAT (black)	1	1
	○ 65401-10401.....	ASS'Y-HINGE, rear seat	2	2
	3-34416-1.....	SCREW hinge to frame	6	6
	9-16414-1.....	WASHER-lock	6	6

REAR SEAT BACK FITTING

Fig. 60

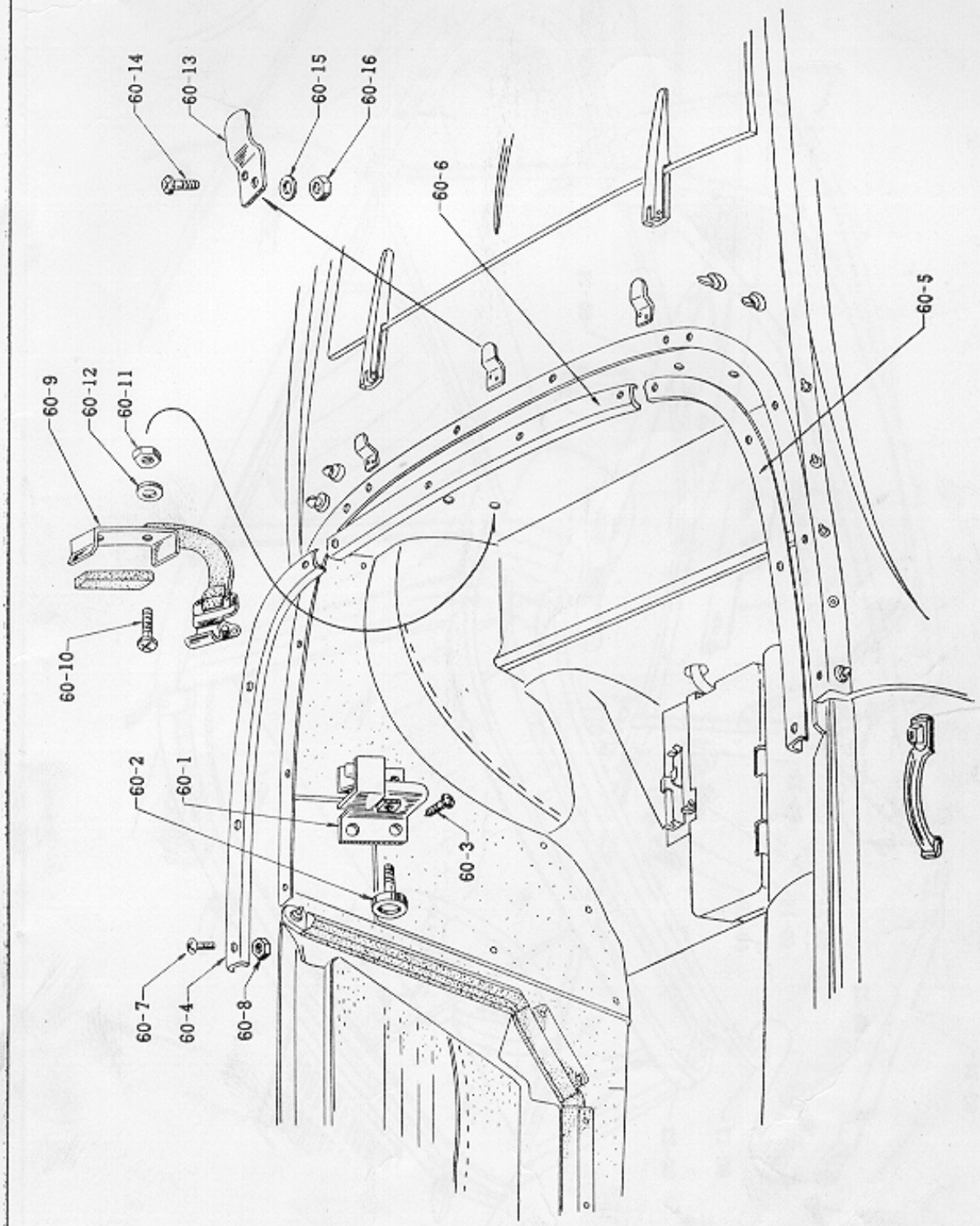

SOFT TOP FRAME

Fig. 60-A

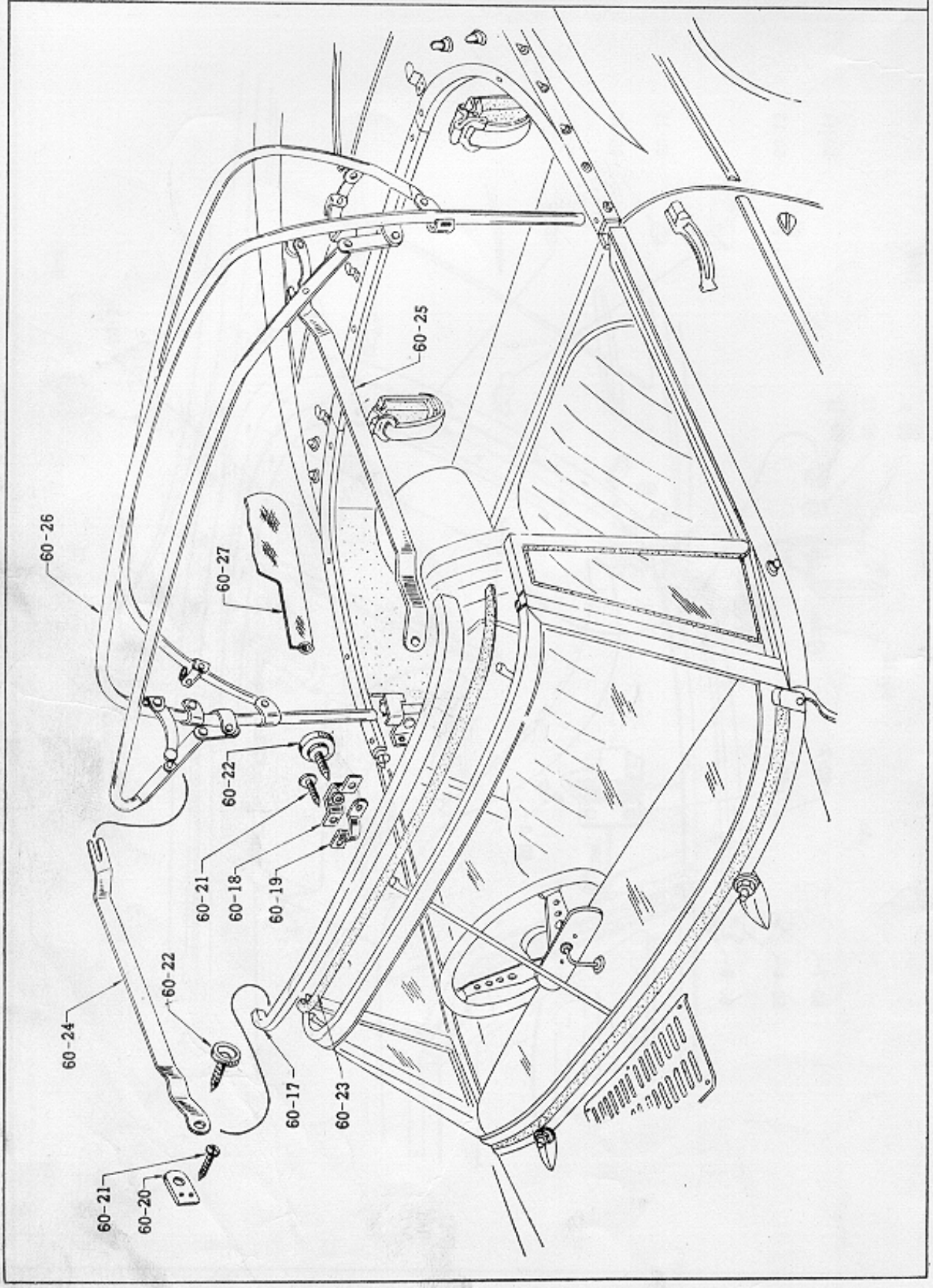

REAR SEAT BACK FITTING

ILL. NO.	PART NO.	PART NAME	Q'TY PER SECTION SP310	Q'TY PER SECTION SPL310
60-1	○ 97910-10400	ASS'Y-SUPPORT, top frame R.H.	1	1
	○ 97911-10400	ASS'Y-SUPPORT, top frame L.H.	1	1
60-2	○ 97728-10400	ASS'Y-SCREW, clamp	2	2
60-3	3-34012-2	SCREW	8	8
60-4	○ 79850-10400	MOULDING-waist R.H.	1	1
60-5	○ 79851-10400	MOULDING-waist L.H.	1	1
60-6	○ 79852-10400	MOULDING-waist, center	1	1
60-7	3-30608-2	SCREW	12	12
60-8	9-11106-1	NUT	12	12
60-9	○ 79121-10400	ASS'Y-CLAMP, top frame	2	2
60-10	3-14416-1	SCREW	4	4
60-11	9-11144-1	NUT	4	4
60-12	9-15414-1	WASHER-plain	4	4
60-13	○ 97740-10400	HOOK-rear, soft top	3	3
60-14	3-30812-2	SCREW	6	6
60-15	9-15408-1	WASHER-plain	6	6
60-16	9-11108-1	NUT	6	6

ILL. NO.	PART NO.	PART NAME	Q'TY PER SECTION SP310	Q'TY PER SECTION SPL310
	97700-10400.....	**COMPLETE-SOFT, TOP**	1	1
60-17	97720-10400.....	ASS'Y-FRAME, top, front	1	1
60-18	97722-10400.....	ASS'Y-CLAMP, top, front	3	3
60-19	97724-10400.....	BACE-clamp, top, frame	3	3
60-20	97726-10400.....	CLAMP-top, side frame	2	2
60-21	5-91032-1.....	SCREW-wood.....	10	10
60-22	97728-10400.....	ASS'Y-SCREW, clamp	3	3
60-23	97730-10400.....	WEATHERSTRIP-top, front	1	1
	97780-10400.....	RUBBER-seal, door, soft top	2	2
60-24	97745-10400.....	FRAME-side, soft top R.H.	1	1
60-25	97746-10400.....	FRAME-side, soft top L.H.	1	1
60-26	97800-10400.....	ASS'Y-FRAME, soft top	1	1
60-27	97831-10400.....	COVER-frame, soft top	2	2

SOFT TOP & FRAME

Part No.	Page
76905-10401	141
76906-10400	141
76906-10401	141
76910-10400	152
76910-10401	152
76911-10400	152
76911-10401	152
76921-10400	141
76921-10401	141
76922-10400	141
76922-10401	141
76923-10400	152
76923-10401	152
76924-10400	152
76924-10401	152
78100-10430	149
78101-10430	149
78201-10400	149
78202-10400	149
79100-10400	149
79121-10400	157
79850-10400	157
79851-10400	157
79852-10400	157
79901-10400	139

80000

Part No.	Page
80010-10450	147
80100-10430	144
80101-10430	144
80200-10401	144
80201-10401	144
80220-10400	144
80221-10400	144
80226-10401	144
80245-10400	144
80286-10401	144
80286-10501	144
80302-10400	144
80306-10400	144
80306-10500	144
80308-10400	144
80312-10400	144
80314-10400	144
80316-10400	145
80317-00800	144
80330-10400	144
80335-10400	144
80336-10400	144
80341-10400	144
80400-10400	145
80410-10400	145
80500-10400	146
80501-10400	146
80502-10400	146
80503-10400	146
80504-10400	146
80545-35000	146
80546-35000	146
80565-10400	146
80566-10400	146
80570-35001	146
80571-35001	146
80600-10400	146
80601-10400	146
80630-35000	146
80672-32200	147
80673-32200	147
80674-33100	147
80675-04100	147
80676-10400	147
80685-04100	147
80686-04100	147
80691-26261	147
80700-10400	146
80701-10400	146
80760-32200	147
80801-10400	145
80802-10400	145
80919-32200	145
80950-10400	145
80950-10401	145
80951-10400	145
80951-10401	145
82451-30000	145
84120-10400	151
84300-10430	151
84403-10400	151
84404-10400	151
84410-04100	151
84411-04100	151
84430-25760	151
84450-10400	151
84460-25760	151
84474-10400	151
84475-10400	151
84480-10400	152
84806-10400	152
84901-10400	152
84902-10400	152
85002-10400	149
85002-10401	149
85200-10401	149
85201-10400	149
86000-10400	154
86000-10401	154
86102-10400	154
86300-10400	154
86300-10401	154
86501-10400	154
86502-36700	154
86511-04700	154
86522-10400	154
86527-00100	154
86529-00100	155
86532-04700	154
86800-10400	154
86800-10401	154
88000-10400	154
88000-10401	154

90000

Part No.	Page
95144-04100	159
95155-10400	159
95190-10400	159
95191-10400	159
96301-10500	129
96301-35000	129
96321-08600	136
96500-10400	136
96702-10400	136
97331-04100	149
97700-10400	158
97720-10400	158
97722-10400	158
97724-10400	158
97726-10400	158
97728-10400	157, 158
97730-10400	158
97740-10400	157
97745-10400	158
97746-10400	158
97780-10400	158
97800-10400	158
97831-10400	158
97910-10400	157
97911-10400	157
99950-10400	139

INDEX (CLASSIFIED BY PARTS NO.)

INDEX

(CLASSIFIED BY PART NO.)

Part No. Page

10000

10000–10450.....1
10000–10550.....1
10001–10450.....1
10001–10550.....1
10005–32200.....5
10006–32200.....15
11010–32225.....4
11012–32200.....5
11013–32200.....5
11014–32200.....5
11019–32200.....4
11021–30000.....4
11021–32200.....4
11021–32200.....15
11023–32200.....4
11024–03200.....4
11026–30000.....5
11030–32200.....5
11035–30000.....5
11041–10400.....15
11044–32200.....15
11056–32200.....15
11057–32200.....15
11060–10400.....15
11062–30000.....15
11063–32200.....15
11065–30000.....15
11110–32200.....5
11120–10460.....17, 111
11120–30000.....5
11121–32200.....5
11215–32200.....7
11216–32200.....7
11223–10401.....120
11223–32200.....7
11224–10401.....120
11312–10400.....7
11328–08000.....7
11328–30001.....37
12010–32200.....9
12010–32202.....9
12010–32203.....9
12010–32204.....9
12010–32205.....9
12010–32207.....9
12024–32200.....9
12030–32200.....9
12032–32200.....9
12033–32200.....9
12035–32200.....9
12036–32200.....9
12037–32200.....9
12038–32200.....9
12040–32200.....9
12100–32200.....9
12109–32200.....9
12111–10400.....9
12112–58000.....9
12117–10400.....9
12118–10400.....9
12119–10400.....9
12120–10400.....9
12121–10400.....9
12122–10400.....9
12200–32201.....10
12207–32200.....10
12209–32200.....10
12210–32200.....10
12211–32200.....10
12212–32200.....10
12279–32200.....4
12282–32200.....4
12283–32200.....4
12286–32200.....4
12289–32201.....4
12299–32200.....10
12302–32200.....10
12303–32200.....10
12308–32200.....10
12309–32200.....10
12310–32201.....10
12312–08700.....10
12313–30000.....10
12314–30000.....10
13001–10401.....12
13002–32200.....4
13003–32200.....4
13004–32200.....4
13004–32201.....4
13010–32200.....12
13021–32200.....10
13024–32200.....12
13028–32200.....12
13030–08000.....12
13032–30000.....12
13035–32200.....5
13037–32200.....5
13042–32200.....5
13044–32200.....5
13070–32200.....12
13078–32200.....12
13079–32200.....12
13081–32201.....4
13082–08000.....12
13201–32201.....12
13201–32202.....12
13201–32203.....12
13202-32204.....12
13202-32205.....12
13202-32206.....12
13203-32200.....12
13204-08100.....12
13207-10400.....12
13209-08000.....12
13210-32200.....12
13222-32200.....13
13223-32200.....13
13226-58000.....13
13228-10400.....15
13231-32200.....13
13238-32200.....13
13239-10400.....15
13252-32200.....12
13254-58000.....13
13255-58000.....13
13256-58000.....13
13258-32200.....13
13259-32200.....13
13264-10400.....15
13270-32200.....15
13271-32200.....15
13278-30000.....15
13287-58000.....13
13288-58000.....13
13289-58000.....13
13291-58000.....13
14003-10400.....17
14004-10400.....17
14005-32200.....17
14006-58000.....17
14007-10400.....17
14009-10450.....17
14012-34200.....17
14013-30000.....17
14020-32200.....17
14021-10400.....17
14022-34200.....17
14024-58000.....17
14025-85060.....17
14026-58000.....17
14034-32200.....17
14035-32200.....17
14037-32200.....17
14039-30000.....36
14330-10400.....17
15010-32200.....19
15015-32200.....19
15020-32200.....19
15021-32200.....19
15023-32200.....19
15027-32200.....19
15030-32200.....19
15041-32200.....19
15042-32200.....4
15050-32200.....19
15066-32200.....19
15132-58000.....19
15133-58000.....19
15136-58000.....19
15137-58000.....19
15140-32200.....5
15146-25660.....4
15200-32201.....21
15208-32250.....21
15213-43800.....21
15223-30100.....21
15224-43800.....21
15227-43800.....21
15228-43800.....21
15229-32201.....21
15230-43800.....21
15238-32201.....21
15239-32200.....21
15255-10400.....15
15262-10400.....5
15300-32200.....21
15301-32200.....21
15302-32201.....21
16010-10402.....23
16027-10400.....23
16028-87860.....29
16031-10560.....25
16060-10400.....25
16060-85060.....25
16061-10400.....24
16062-10400.....24
16064-10400.....24
16065-10400.....23
16065-25661.....24
16065-85060.....24
16066-10400.....24
16082-10400.....23
16085-10400.....23
16086-00100.....23
16086-30100.....25
16091-10560.....24
16092-10400.....24
16094-08000.....24
16094-10400.....24

Part No.	Page
16094-85060	24
16098-08000	24
16101-10400	24
16108-08000	24
16111-08000	24
16114-10400	24
16116-10400	23
16120-10400	24
16121-85060	24
16124-85060	24
16125-10400	24
16127-10400	24
16129-85060	24
16130-10400	23
16134-10400	24
16144-10400	23
16145-10400	23
16145-85060	24
16164-85060	23
16174-10401	17
16185-10400	23
16185-10560	23
16190-10400	23
16193-10400	24
16194-10400	24
16215-10400	24
16215-10405	23
16217-10400	23
16220-30100	23
16238-10400	23
16247-10400	24
16248-10400	24
16276-10400	24
16306-10400	24
16322-10400	25
16324-10400	23
16325-10400	23
16326-10400	23
16331-10400	24
16335-10400	25
16341-10400	23
16342-10400	23
16343-10400	23
16344-10400	23
16345-10400	23
16346-10400	23
16347-10400	23
16350-10400	23
16351-10400	23
16352-10400	23
16353-10400	23
16402-32200	29
16403-32200	29
16407-32200	29
16420-30100	30
16440-32200	29
16500-10400	27
16500-10500	27
16523-10400	27
16526-10400	27
16528-10400	27
16528-10500	27
16536-10400	27
16546-10400	27
16547-10400	27
17010-10400	29
17015-32200	29
17016-00100	29
17019-50000	29
17019-85060	29
17020-00100	29
17020-85060	29
17022-32200	29
17022-32201	29
17040-32200	29
17040-32201	29
17047-50000	29
17048-52600	29
17049-50000	29
17052-30100	29
17053-32200	29
17061-50000	29
17065-52600	29
17072-32200	29
17075-32200	29
17075-50000	29
17078-32200	29
17087-32201	29
17088-32200	30
17089-58000	29
17090-32200	29
17090-50000	29
17099-30000	30
17103-01300	30
17103-50000	30
17106-32200	30
17201-10400	32
17218-10400	32
17227-10400	32
17229-08000	32
17231-10400	32
17232-10400	32
17234-10400	32
17251-04101	32
17291-10400	32
17293-85660	32
17294-85060	32
17308-10400	32
17310-10400	32
17406-10400	32
17455-25760	32
17456-10400	32
17502-10401	32
17503-10400	32
17512-09100	32
17522-10400	30
18010-10401	34
18010-10500	34
18020-04100	34
18022-04100	34
18100-10400	34
18100-10500	34
18138-10401	34
18410-10400	34
18410-10500	34
18419-10401	34

20000

Part No.	Page
20010-10400	36
20013-32200	36
20014-32200	36
20015-32200	36
20021-10400	36
20021-10450	36
20022-10400	36
20023-04500	36
20023-04550	36
20023-10400	36
20023-10450	36
20024-10400	36
20031-04500	36
20102-10400	36
20132-32201	36
20132-32250	36
20133-10400	37
20133-32200	36
20136-30100	37
20201-10400	36
20203-10400	120
20211-10401	37
20216-10401	37
20220-04100	36
20300-10450	37
20641-10400	37
20641-10450	37
21010-32200	39
21012-01300	39
21013-32200	39
21014-32200	39
21022-32202	39
21026-04000	39
21027-04000	39
21035-32200	39
21043-04000	39
21051-32200	39
21054-32200	39
21060-32200	39
21061-32200	39
21062-32200	39
21066-10400	39
21067-30000	39
21074-32200	39
21200-08001	15
21211-00800	5.41
21400-10400	41
21430-30001	41
21501-10400	41
21501-10500	41

Part No.	Page
26511-04200	63
26511-32200	67
26512-04200	63
26512-32200	67
26513-04200	63
26513-32200	67
26518-32200	67
26520-10400	65
26520-10500	65
26521-09700	65
26521-09701	65
26522-09700	65
26523-09700	65
26528-09700	65
26528-10400	65
26529-10400	65
26530-10400	65
26540-10400	67
26544-10400	67
26547-10400	67
26560-10400	65
26705-04100	61
26705-04200	61
26713-34200	67
26715-04200	63,65
27716-07300	65
26717-04200	63,67
27010-10400	68
27130-10400	134
27310-10400	68
27310-10401	68
27310-10500	68
27390-10400	68
27390-10500	68
27400-10400	59
27400-10401	59
27400-10500	59
27401-10400	39

30000

Part No.	Page
30100-32208	70
30210-37001	70
30211-30100	70
30213-30100	70
30214-37001	70
30220-32200	70
30224-31300	70
30225-31300	70
30229-30100	70
30230-30100	70
30231-30100	70
30411-32200	5
30412-85060	4
30413-32200	77
30414-00100	77
30501-32200	70
30502-32200	70
30513-26760	70
30530-32200	70
30532-30100	70
30533-32200	70
30536-30002	70
30542-30000	70
30543-01301	74
30546-32200	70
30547-32200	70
30548-32200	70
30610-30001	104
30611-27260	100
30611-27260	104
30612-27260	100
30613-27260	100
30614-01300	100
30620-32201	106
30622-30001	106
30624-30001	106
30625-27260	106
30626-30001	106
30627-32200	106
30628-32200	106
30646-30000	70
30650-10500	106
30656-00200	102
30657-00200	102
32010-10450	74
32101-10400	74
32103-04100	74
32111-32200	74
32112-30800	74
32120-00100	75
32124-26760	75
32128-07200	75
32130-08000	75
32132-07200	75
32134-01300	76
32136-07200	75
32142-26760	75
32150-03200	77
32160-10450	76
32162-10400	76
32167-03200	77
32168-03200	77
32169-03200	77
32172-03200	76
32201-10400	74
32202-30000	10
32203-26760	74
32205-26760	74
32206-26760	74
32211-27161	74
32213-27160	74
32214-26760	74
32218-26760	74
32219-26760	74
32224-26760	74
32226-26760	74
32227-26760	74
32228-26760	74
32229-26760	74
32241-07200	74
32243-26760	75
32246-26760	75
32247-26760	75
32248-26760	75
32251-26761	75
32252-26761	75
32253-26760	75
32261-27161	75
32262-27161	75
32264-26761	75
32265-26761	75
32266-26761	75
32272-26760	75
32273-26760	75
32280-27160	74
32281-27160	74
32283-00100	74
32290-03200	74
32291-00100	74
32601-02700	74
32602-26760	74
32603-26760	75
32604-02701	75
32605-02700	75
32606-02700	75
32607-02701	75
32701-10400	75
32703-10400	75
32706-26760	51, 75
32707-04100	75
32707-32200	51
32709-04100	51, 76
32710-04100	51, 76
32717-04100	76
32718-04103	75
32801-03200	76
32803-03200	76, 77
32804-85060	76, 77
32805-03200	76
32809-03200	76
32811-03200	76
32813-03200	76
32814-03200	76
32814-03201	76
32816-03200	76
32819-03200	76
32823-03200	76
32824-03200	76
32825-26761	76
32826-03200	77
32827-26760	77
32828-26760	76
32829-26760	77
32830-03200	77
32841-10400	77
32849-04700	76
32850-04700	77
32852-04700	77
32853-04700	77
32865-10400	77
32869-03200	139
32891-04700	76
32892-04700	76
32893-04700	76
32895-04700	76
32896-04700	76
32897-04700	76
32898-04700	76
34414-26760	75
34424-01300	76
36010-10400	79
36310-10400	79
36320-10400	79
36327-04101	79
36329-04100	79
36330-04100	79

Part No.	Page
36332-04100	79
36339-04100	79
36342-04100	81
36385-10400	81
36402-10400	81
36425-04100	81
36428-04100	81
36433-10400	79
36437-04100	81
36450-10400	81
36451-10400	81
36463-10400	79
36471-04100	81
36510-04100	81
36510-30000	81
36514-04100	82
36518-30000	82
36523-30000	82
36530-04100	82
36531-04100	82
36537-30000	82
36538-30000	82
36541-30000	81, 82
36543-30000	82
36544-30000	82
36545-30000	82
36550-10401	81
37000-10400	84
37111-08000	84
37113-26760	84
37117-11960	84
37126-11960	84
37130-11960	84, 112
37133-11960	84, 112
37134-11960	84, 112
37136-11960	112
37138-11960	84
37148-08000	84
37149-08000	84
37150-08000	84
37151-08000	84
37152-08000	84
37153-08000	84
37210-10400	84
37219-26760	84
38100-10400	94
38102-04100	94
38103-04100	94
38120-04100	94
38127-09400	95
38128-09400	95
38129-09400	95
38130-09400	95
38131-09400	95
38132-09400	95
38133-09400	95
38134-09400	95
38135-09400	95
38136-09400	95
38137-09400	95
38138-09400	95
38139-09400	95
38140-04100	95
38140-09400	95
38141-09400	95
38153-04100	94
38153-25660	94
38154-04100	94
38154-25660	94
38155-04100	94
38155-25660	94
38156-04100	94
38156-25660	94
38161-04100	94
38164-08000	96
38165-09400	94
38166-09400	94
38167-09400	94
38189-02700	95
38210-09400	95
38212-04101	96
38215-01300	95
38216-01300	95
38300-10400	94
38310-10400	94
38315-04100	94
38320-04100	95
38322-55100	75, 95
38421-04105	94
38423-04101	94
38424-04101	94
38424-08000	94
38424-08001	94
38425-04100	94
38426-04100	94
38427-04100	94
38428-25660	94
38440-04100	94
38440-14361	91
40014-04150	86
40015-04150	86
40029-25660	86
40037-04100	91
40040-04100	86, 91
40052-04100	86
40053-04100	86
40070-04100	86
40071-04200	86
40091-08000	86
40202-04151	91
40206-10500	91, 96
40215-10360	91
40221-04101	91, 96
40225-04100	91
40227-08000	91
40231-04100	91
40234-04100	91
40300-10400	91
40300-10500	91
40315-10400	91
41000-10502	89
41010-10502	89
41020-10501	89
41030-10501	89
41058-10360	79
41060-10500	89
41066-10500	89, 98
41090-10600	89
41100-10500	89
41101-10500	89
41102-10500	89
41103-10500	89
41110-10500	89
41114-10500	89
41116-10500	89
41123-10500	89
41125-30001	89
41128-30001	89, 98, 106
41129-30001	89, 98, 106
41130-04100	89
41131-10500	89
41140-10500	89
41141-10500	89
41157-30000	89
41158-04100	89
43010-10400	95
43027-04100	95
43036-04100	96
43067-30000	95
43068-04101	95
43069-04101	96
43070-04101	96
43083-04101	96
43084-04101	96
43215-08000	96
43233-04100	96
43233-04101	96
43234-04101	96
43235-04101	96
43239-04100	96
44000-10600	98
44010-10600	98
44020-10600	98
44030-10600	98
44060-10500	98
44070-10500	98
44070-30000	98
44071-30001	98
44081-04100	98
44081-32201	89
44082-32200	89
44083-32200	89
44084-30000	98
44084-32201	89
44100-10500	98
44110-10500	98
44114-10500	98
44118-30001	98
44123-10500	98
44125-10500	98
44141-31700	98
44142-31700	98
44144-31700	98
44145-31700	98
44149-31700	98
44205-10500	98
46010-07400	100
46027-27260	100
46032-27260	100, 104
46034-01300	100, 104
46035-01300	100, 104
46038-30000	100
46042-27260	100
46043-27260	100, 104
46050-30100	100
46056-27260	100, 104
46057-30100	100
46061-30000	104
46063-30800	100
46064-30000	104

40000

Part No.	Page
46065-27260	100
46065-30000	104
46069-27260	100
46069-30000	104
46070-27260	100,104
46073-30800	100,104
46075-26260	100
46076-30800	100,104
46077-30800	104
46078-27260	100
46079-27260	100,104
46080-30001	104
46080-30500	100
46100-27260	100,104
46123-08700	108
46124-35100	108
46210-30001	102
46212-30000	106
46223-10401	102
46223-10500	102
46228-10400	102
46229-10400	102
46234-04100	102
46237-30000	102,106
46240-10400	102
46242-10400	102
46269-04100	120
46290-10500	102
46310-10500	102
46316-30001	102
46425-30000	108
46431-04100	108
46460-04100	108
46482-30000	108
46485-04100	108
46488-04100	108
46520-10400	108
46520-10501	108
46540-10400	108
46540-10500	108
48010-10450	111
48010-10550	111
48011-04100	111
48020-10400	112
48023-04100	112
48023-04200	112
48025-04100	112
48029-04100	111
48035-04100	111
48046-30800	112
48047-30800	112
48050-10401	111
48050-10501	111
48053-10500	112
48054-10400	112
48062-30800	112
48064-04100	111
48081-04700	112
48085-04700	112
48100-04100	112
48105-30800	112
48106-30800	112
48107-30800	112
48108-95960	112
48109-95960	112
48110-95960	112
48111-95960	112
48125-30800	112
48126-30800	112
48127-30800	111
48127-30001	116
48135-30800	111
48201-04100	111
48203-04100	111
48204-30800	111
48206-30800	111
48210-04100	111
48211-04100	111
48212-04100	111
48213-04100	111
48219-04100	111
48322-10400	134
48324-04100	134
48325-04100	134
48326-04100	134
48327-10400	118
48327-10500	118
48328-10400	118
48328-10500	118
48332-10400	118
48400-10400	118
48405-30800	118
48418-30800	118
48419-30800	118
48420-10400	118
48421-10400	118
48422-09400	118
48423-09400	118
48424-10400	118
48425-09400	118
48433-09400	118
48440-10400	118
48450-10400	118
48463-10400	118
48465-10400	118
48466-32200	118
48501-04100	112
48504-04100	113,116
48509-04100	116
48510-04100	116
48520-04100	116
48521-04100	113,116
48522-04300	116
48530-04101	116
48530-04200	116
48531-04100	116
48539-10600	111
48540-04100	116
48546-04100	116
48550-04100	116
48551-04100	116
48560-04100	116
48570-04100	116
48571-04100	116
48583-04100	116

50000

Part. No.	Page
50100-10400	120
50100-10500	120
51010-09400	120
51030-10400	120
51050-10400	120
51050-10500	120
51060-10400	120
54010-10401	123
54010-10501	123
54030-04200	86
54033-04200	86
54036-04100	123
54050-09400	87
54053-04100	87
54067-09400	87
54068-09400	87
54401-04102	120
54419-04200	86
54504-32200	86
54507-04100	87
54509-04100	87
54529-04200	86
54530-04200	86
54533-04100	87
54536-04101	87
54539-04200	86
54541-04100	87
54542-04101	87
54543-04101	87
54544-04101	87
54546-04101	87
54551-32200	86
54552-04200	86
54611-10400	123
54613-10400	123
54614-04200	123
54616-04200	123
54617-04200	123
54618-04200	123
54620-04200	120
54621-04200	120
55020-10400	125
55020-10500	125
55021-10400	125
55021-10500	125
55022-10400	125
55022-10500	125
55023-10500	125
55024-10500	125
55045-04100	125

Part No.	Page
55046-04100	125
55054-04101	125
55056-04100	125
55057-10500	125
55201-10400	120
55202-10400	120
55205-10400	120
55206-10400	120
55220-04100	125
55221-04100	125
55224-04100	125
55240-04102	125
55243-04100	125
55247-10400	125
55247-10500	125
55262-04102	125
55266-04102	125
56110-04200	123
56112-09400	123
56113-09400	123, 126
56114-09400	123, 126
56115-04101	123
56117-09400	125
56127-45460	126
56210-04200	125
56229-04100	126
57235-04151	151
57901-10400	152

60000

Part No.	Page
62300-10400	127
62330-10400	127
62504-10400	131
62505-10400	131
62506-10400	131
62600-10400	127
62650-10400	127
62650-10401	127
62663-10401	127, 149
62670-10400	127
62672-36700	127
63100-10430	129
63101-10430	129
63801-10400	129
63802-10400	129
63805-04700	129
63821-10400	129
63822-10400	129
64100-10430	131
64100-10530	131
64101-10430	131
65100-10430	131
65158-04100	132
65401-10401	157
65405-10400	131
65409-04100	131
65601-01300	132
65617-00800	132
65617-10400	132
65630-01300	132
65645-10400	132
65701-10400	131
65801-10400	129, 149
65810-10400	129
65846-43700	131
66305-10400	132
66503-05000	132
66530-10400	134
66901-10400	134
66902-10400	134
66911-10400	134
66911-10401	134
66912-10400	134
66912-10401	134
66913-10400	134
66913-10401	134
66914-10400	134
66914-10401	134
67901-10400	134
67901-10500	134
67902-10400	134
67902-10500	134
67903-10400	134
67911-10400	134
67911-10500	134
67912-10400	134
67912-10500	134
68100-10430	136
68100-10530	136
68134-09401	136
68140-10400	136
68452-10400	136
68452-10500	136
68601-10400	136
68607-10400	136
68630-32202	136
68638-10400	136
68639-10400	136
68643-10400	136

70000

Part No.	Page
72100-10400	136
72110-10400	136
72113-10400	136
72114-10400	136
72115-10400	136
72145-10400	136
72146-10400	136
72510-10400	136
72613-10400	137
72610-10401	137
72613-10500	137
72620-10401	137
72801-10400	137
72811-10401	137
72812-10401	137
72905-10400	137
72906-10400	137
73150-10400	159
73150-10500	159
74340-12161	129
74921-10400	139
74922-10400	139
74923-10400	139
74924-10400	139
74925-10400	139
74926-10400	139
74927-10400	139
74928-10400	139
74929-10400	139
74930-10400	139
74931-10400	139
74932-10400	141
74933-10400	141
74934-10400	141
74935-10400	141
74952-10400	139
74960-10400	139
76419-10400	141
76802-10400	141
76810-10400	141
76811-10400	141
76901-10400	141
76901-10401	141
76902-10400	141
76902-10401	141
76903-10400	141
76903-10401	141
76904-10400	141
76904-10401	141
76905-10400	141

NISSAN

PRINTED IN JAPAN

DATSUN FAIRLADY
PARTS CATALOG

(暫　　定　　版)

MODEL

SP310・SPL310

1963-

(後　　期)

NISSAN MOTOR CO., LTD.



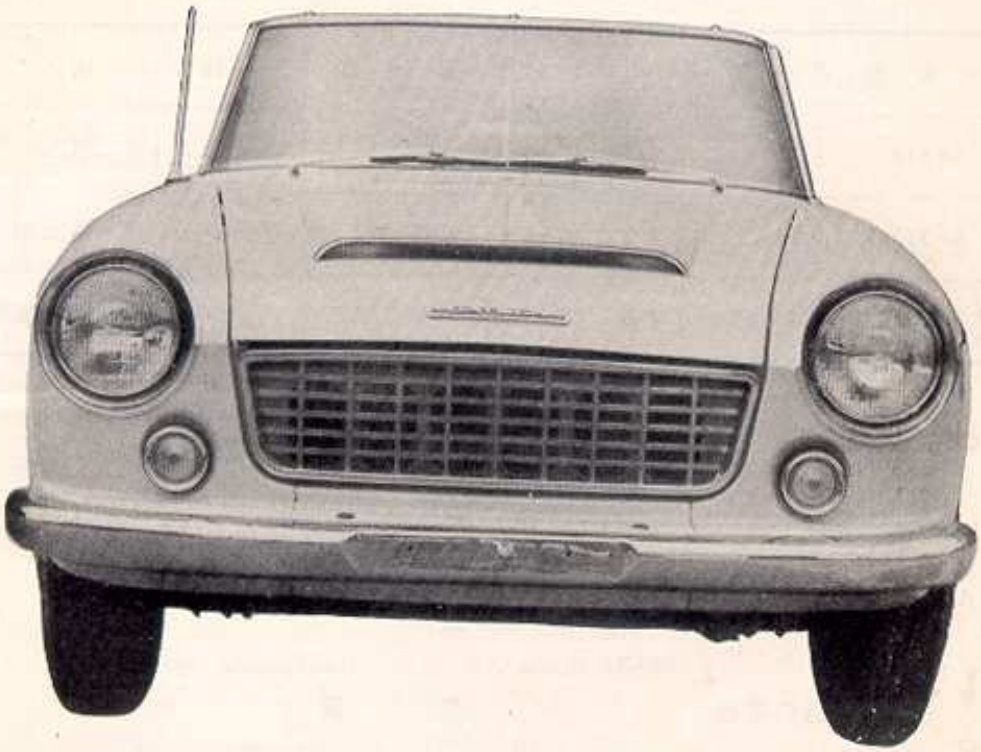



部品カタログご使用について

（1） この部品カタログは ダットサン フェアレディ 1500 SP 310 型 および SPL 310

主 要 諸 元 表

MAJOR SPECIFICATIONS

ITEM / MODEL			SP & SPL 310
車両寸法	CAR DIMENSIONS		
	Overall length	(車 両 全 長) (m/m)	3,910
	Overall width	(車 両 全 巾) (m/m)	1,495
	Overall height	(車 両 全 高) (m/m)	1,275
	Wheel base	(ホイールベース) (m/m)	2,280
	Tread-front	(トレッド — 前) (m/m)	1,213
	Tread-rear	(トレッド — 後) (m/m)	1,198
	Road clearance	(最 低 地 上 高) (m/m)	160
車両重量	CAR WEIGHT		
	Car weight	(車 両 重 量) (kg)	905
	Seats	(乗 車 定 員)	3
	Total car weight	(車 両 総 重 量) (kg)	1,070
性能	PERFORMANCES		
	Maximum speed	(最 高 速 度) (km/h)	155
	Fuel consumption	(燃 料 消 費 率) (km/l)	16.0
	Grade ability	(登 坂 能 力) (sin θ)	0.460
	Minimum turning radius	(最小回転半径) (m)	4.9
エンジン	ENGINE		
	Type	(型 式)	G
	Sort	(種 類)	Gasoline
	Cylinder arrangement	(シリンダー数及配列)	4-in line
	Cycle	(サ イ ク ル)	4
	Valve arrangement	(弁 配 置)	Over head
	Bore × Stroke	(内 径 × 行 程) (m/m)	80×74
	Piston total displacement	(総 排 気 量) (c/c)	1,488
	Compression ratio	(圧 縮 比)	9.0 : 1
	Maximum power	(最 大 ト ル ク) (PS/r.p.m.)	80/5,600
	Maximum torque	(機 関 寸 法) (kg-m/r.p.m.)	12/4,000
	Length × Width × Height	(長さ×巾×高さ) (m/m)	595×650×621
	Total engine weight	(機関整備重量) (kg)	155

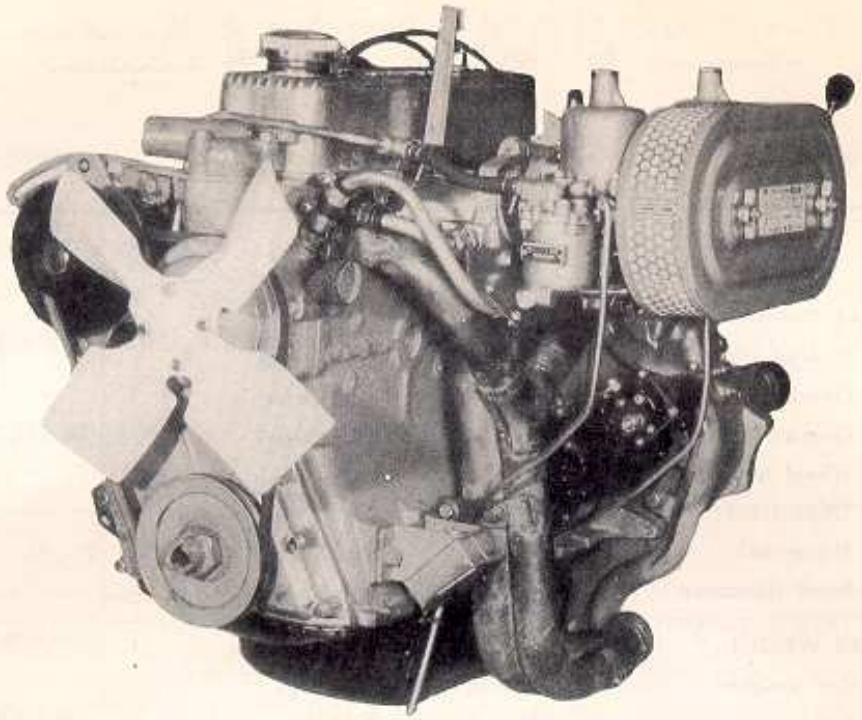

PART No.	PART NAME	Quantity SP310	Quantity SPL310	FORMER PART No.
	ENGINE			
10000-12250 ...	ASS'Y-ENGINE, with transmission	1	—	10000-10450
10000-12350 ...	ASS'Y-ENGINE, with transmission	u-1	1	10000-10550
10001-12250 ...	ASS'Y-ENGINE, with clutch	1	—	10001-10450
10001-12350 ...	ASS'Y-ENGINE, with clutch	u-1	1	10001-10550
	CYLINDER			
11010-37000 ...	ASS'Y-BLOCK, cylinder, with plug	1	1	11010-32225
	CYLINDER FITTING			
30411-61000 ...	PLATE-engine, rear	1	1	30411-32200
13036-61000 ...	COVER-timing chain	1	1	13036-32200
13044-32201 ...	GASKET-timing chain cover	1	1	13044-32200
15262-12200 ...	ASS'Y-TUBE, breather	1	1	15262-10400

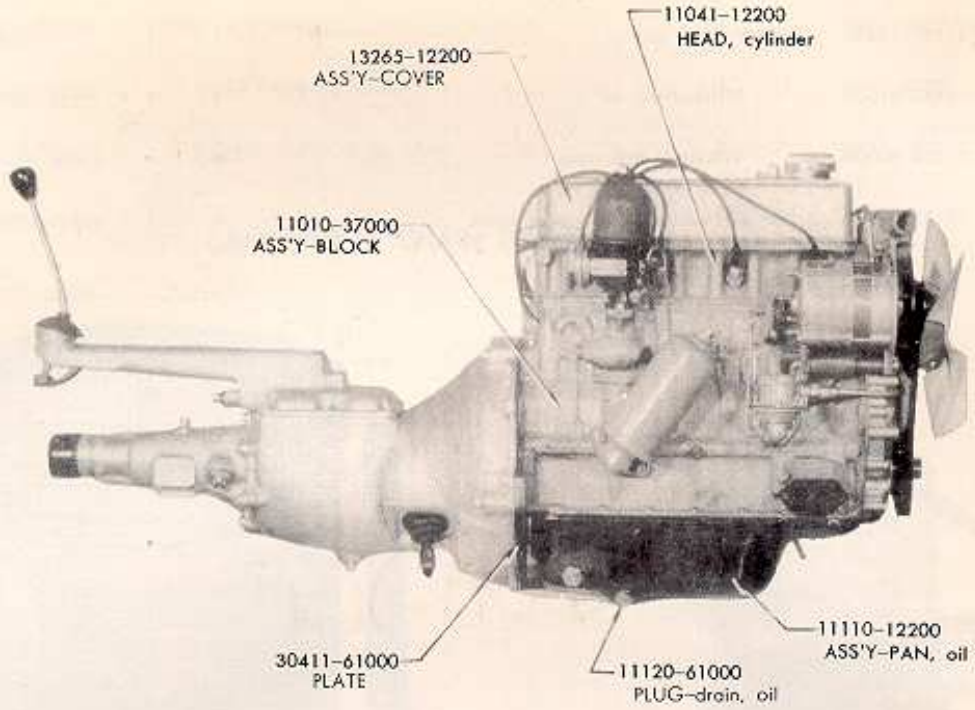
11041-12200
HEAD, cylinder
13265-12200
ASS'Y-COVER
11010-37000
ASS'Y-BLOCK
11110-12200
ASS'Y-PAN, oil
30411-61000
PLATE
11120-61000
PLUG-drain, oil

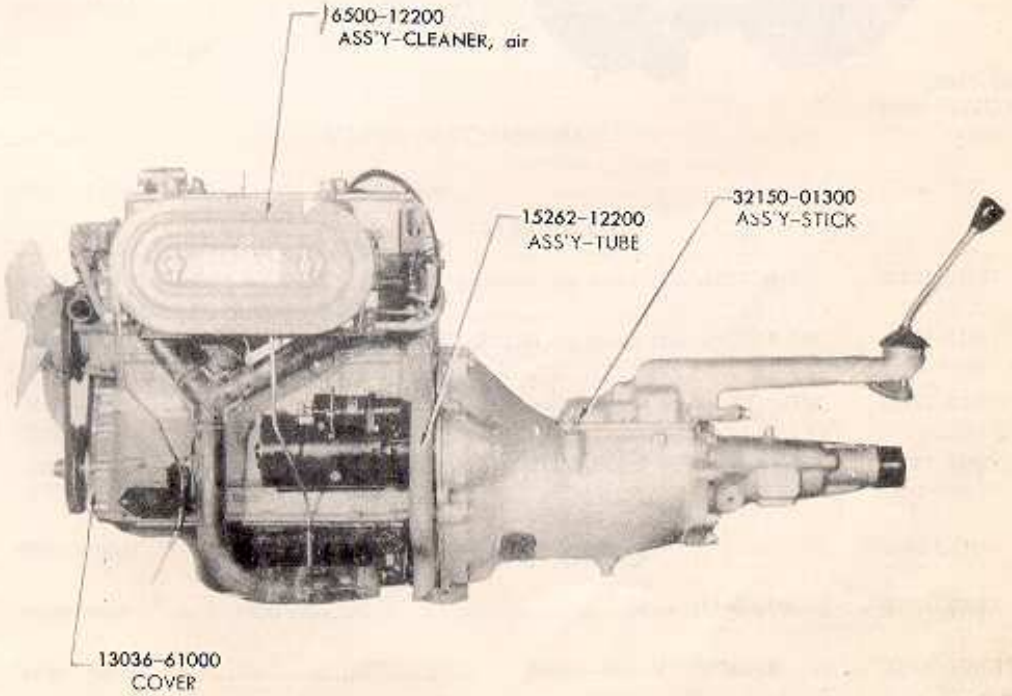
16500-12200
ASS'Y-CLEANER, air
15262-12200
ASS'Y-TUBE
32150-01300
ASS'Y-STICK
13036-61000
COVER

OIL PAN

11110-12200 ...	ASS'Y-PAN, oil	1	1	11110-32200
11120-61000 ...	PLUG-drain, oil	1	1	11120-30000
11026-30000 ...	WASHER-drain plug	1	1	11026-30000
11121-30001 ...	GASKET-oil pan to cylinder block.....	1	1	11121-32200

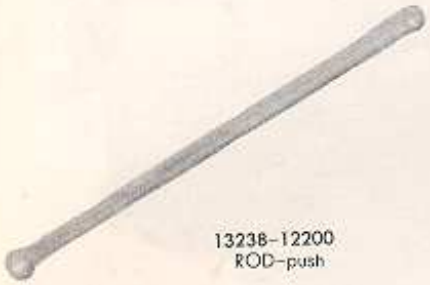

13238-12200
ROD-push

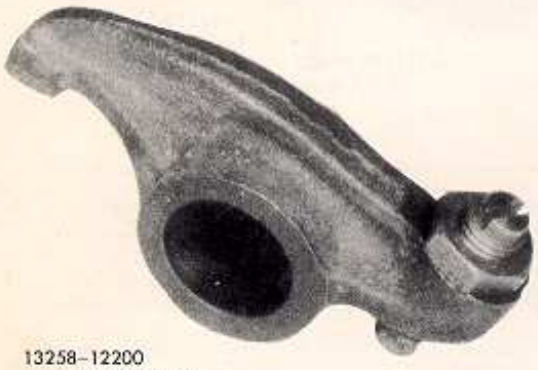

13258-12200
ROCKER-valve



PISTON

PISTON

12010-12200 ...	SET-PISTON, with piston pin (standard size)	4	4	12010-32200
12010-12201 ...	SET-PISTON, with piston pin (0.25mm O/S).....	(4)	(4)	12010-32202
12033-32201 ...	SET-RING, piston (standard size)	1	1	12033-32200
12035-32201 ...	SET-RING, piston (0.25mm O/S)	(1)	(1)	12035-32200

CRANK SHAFT

12200-12200 ...	COMP.-SHAFT, crank	1	1	12200-32201
32202-30000 ...	BUSHING-1st motion shaft.....	1	1	(32202-30000)
12207-37000 ...	SET-BUSHING, crank shaft (standard)	1	1	12207-32200

FLY WHEEL

12310-37000 ...	COMP.-FLY WHEEL	1	1	12310-32201
12312-61000 ...	RING GEAR-fly wheel	1	1	12312-08700
12313-30000 ...	DOWEL-clutch to fly wheel	2	2	12313-30000

CAMSHAFT & CHAIN TENSIONER

13001-12200 ...	CAMSHAFT	1	1	13001-10401
9-15114 ...	WASHER-lock	2	2	1-15114



13202-12200
VALVE-exhaust



13201-12200
VALVE-intake



13222-12200
BRACKET

VALVE MECHANISM

13201-12200 ...	VALVE-intake (standard size)	4	4	13201-32203
13201-12201 ...	VALVE-intake (0.2 m/m O/S)	(4)	(4)	13201-32201
13201-12202 ...	VALVE-intake (0.4 m/m O/S)	(4)	(4)	13201-32202
13202-12200 ...	VALVE-exhaust (standard size)	4	4	13202-32206
13202-12201 ...	VALVE-exhaust (0.2 m/m O/S)	(4)	(4)	13202-32204
13202-12202 ...	VALVE-exhaust (0.4 m/m O/S)	(4)	(4)	13202-32205
13203-32200 ...	SPRING-valve, outer	8	8	13203-32200
13209-12200 ...	RETAINER-valve spring	8	8	13209-08000
13210-12200 ...	COLLAR-valve	16	16	13210-32200
13207-12200 ...	RING-rubber, valve (intake only)	8	8	13207-10400

13222-12200 ...	BRACKET-rocker shaft	3	3	13222-32200
13223-12200 ...	BRACKET-rocker shaft (tapped)	1	1	13223-32200
13224-12200 ...	BOLT-rocker bracket	4	4	1-14670 9-15416
13258-12200 ...	ROCKER-valve (R.H.)	4	4	13258-32200
13259-12200 ...	ROCKER-valve (L.H.)	4	4	13259-32200
9-21225 ...	PIN-split, valve rocker shaft	2	2	13291-58000
13238-12200 ...	ROD-push	8	8	13238-32200



13265-12200
ASS'Y-COVER

13255-10401
ASS'Y-OIL FILLER

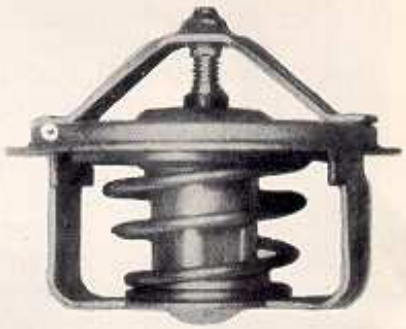

21200-61000
ASS'Y-THERMOSTAT

15255 12250 - 1
15254 12300

CYLINDER HEAD & ROCKER COVER

11041-12200 ...	ASS'Y-HEAD, cylinder	1	1	11041-10400
13265-12200 ...	ASS'Y-COVER, valve rocker	1	1	13264-10400
13255-10401 ...	ASS'Y-OIL FILLER	1	1	13255-10400
21200-61000 ...	ASS'Y-THERMOSTAT	1	1	21200-08001
14057-12200 ...	CONNECTOR-cylinder head	1	1	
13247-12200 ...	NUT-valve rocker			

O.H. GSKS - 10101 - 12227



12202
14060-12200
ASS'Y-MANIFOLD, exhaust



12251
14003-12200
MANIFOLD-intake

MANIFOLD

14003-12200 ...	MANIFOLD-intake	1	1	14003-10400
9-33125 ...	PLUG-welch (25φ)	2	2	11120-10460
2-14628 ...	STUD (to fix carburetor)	4	4	2-14626
9-31208 ...	PLUG-taper thread	1	1	
9-31302 ...	PLUG	2	2	
14060-12200 ...	ASS'Y-MANIFOLD, exhaust	1	1	14004-10400
14061-12200 ...	MANIFOLD-exhaust tube (A)	1	1	
14062-12200 ...	MANIFOLD-exhaust tube (B)	1	1	
14063-12200 ...	CONNECTOR-exhaust manifold	1	1	
9-11145-1	NUT	4	4	
9-15415 ...	WASHER-plain	2	2	
1-21535 ...	SCREW-cap	4	4	

EXHAUST TUBE & MOUNTING

20011-12250 ...	ASS'Y-TUBE, exhaust front, with clamp	1	1	20010-10400
20611-12200 ...	CLAMP-exhaust tube	1	1	20021-10400
20612-12200 ...	CLAMP-exhaust tube	1	1	20013-12200
20220-04100 ...	MOUNTING-rubber exhaust tube	2	2	
20613-12200 ...	INSULATOR-mounting exhaust	2	2	

9-11145-1	NUT	to fix clamp	2	2	14039-30000
9-15115-1	WASHER-lock		2	2	1-14560-1
9-11145-1	NUT	to fix exhaust tube to flame	2	2	
9-15115-1	WASHER-lock		2	2	
9-15415-1	WASHER-plain		2	2	
20135-32251 ...	ASS'Y-CLAMP, muffler, front		2	2	20132-32250
20101-16200 ...	ASS'Y-MUFFLER		1	1	20102-10400
20023-04550 ...	ASS'Y-CLAMP, exhaust tube, "U" bolt		1	1	(20023-04550)
20201-10400 ...	TUBE-exhaust, center		1	1	(20201-10400)
20023-10451 ...	ASS'Y-CLAMP, exhaust tube, 2nd		1	1	20023-10450
20613-12200 ...	INSULATOR-mounting, exhaust		2	2	
20641-10451 ...	ASS'Y-CLAMP, exhaust tube center		1	1	20641-10450

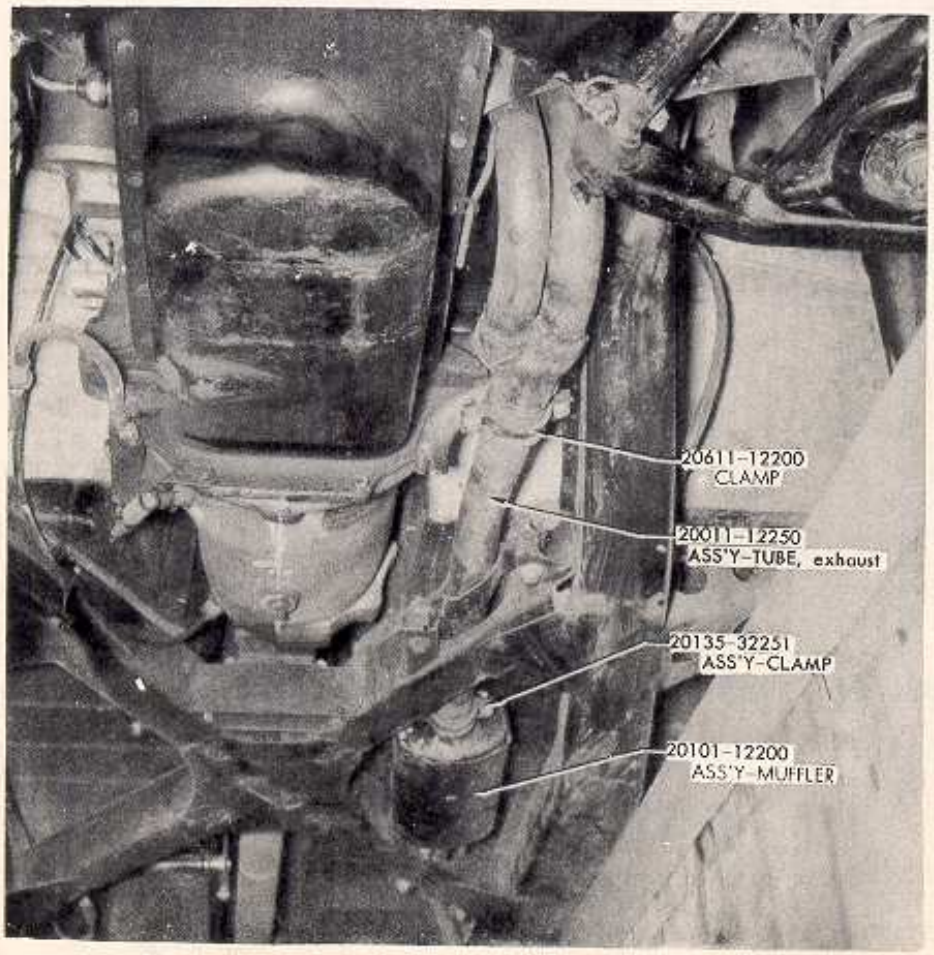

20622-10600 ...	WASHER-strap	to fix rear tube to center tube ...	1	1	20136-30100
9-15415-1	WASHER-plain		1	1	9-15414-1
9-15115-1	WASHER-lock		1	1	9-15114-1
9-11745-1	NUT		1	1	9-11744-1
9-21118-1	PIN-cotter		1	1	9-21016-1
1-11745-1	NUT		1	1	1-11744-1
20211-10401 ...	TUBE-exhaust, rear		1	1	(20211-10401)
20023-04550 ...	ASS'Y-CLAMP, exhaust tube, front		1	1	(20023-04550)

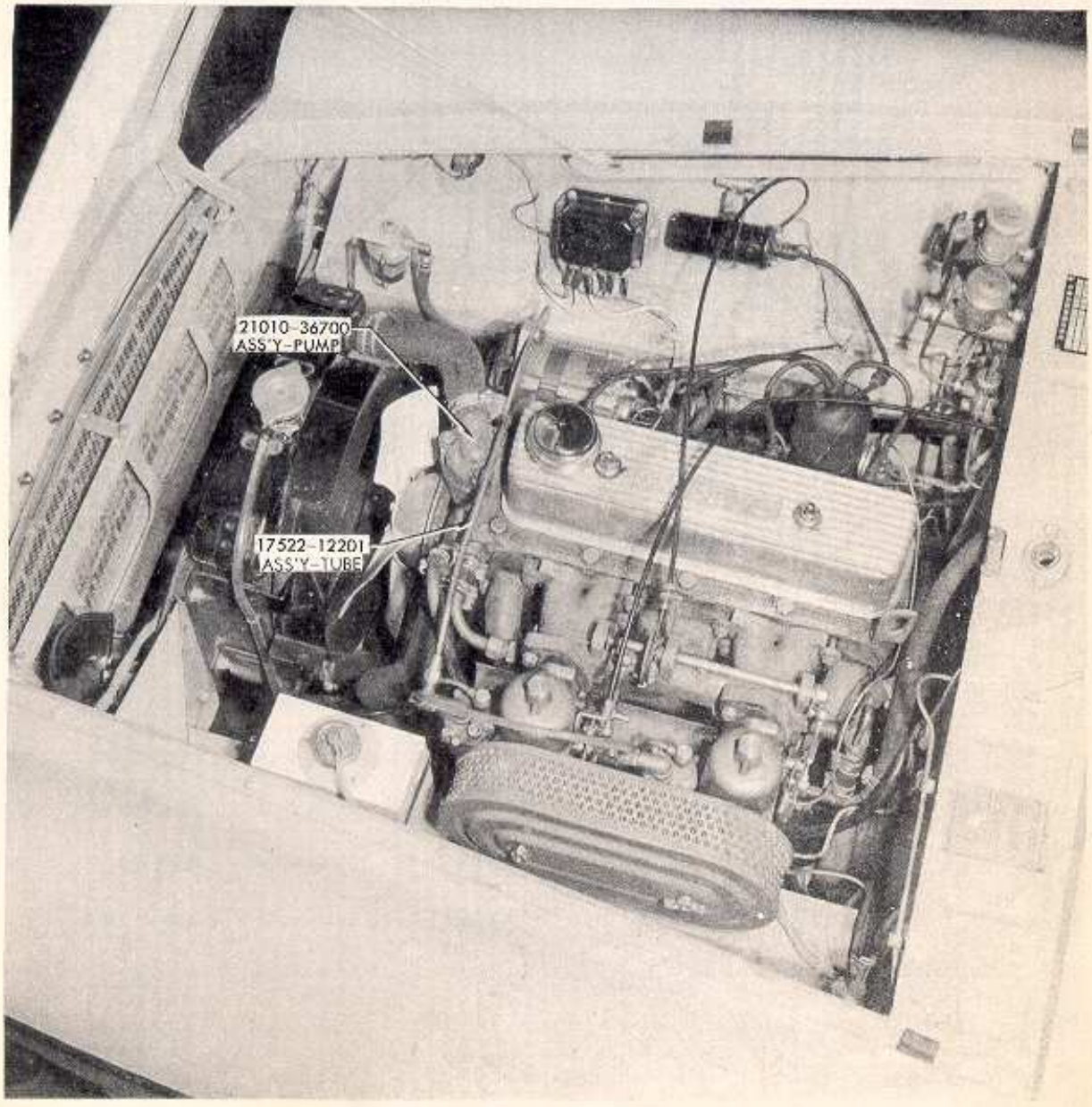

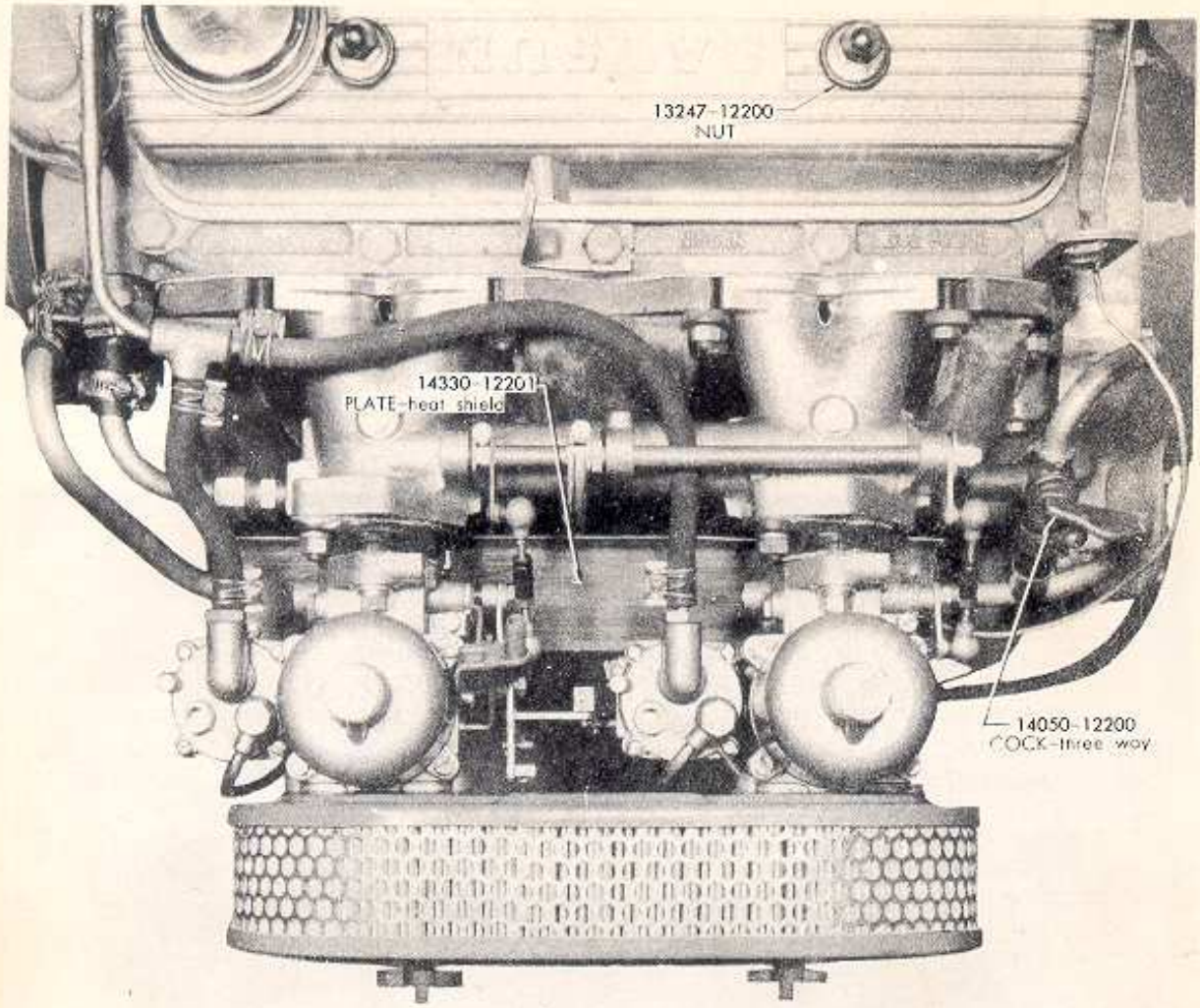

14065-12200 ...	SUPPORT-manifold	1	1	
14041-12200 ...	INSULATOR-exhaust manifold	1	1	
14066-12200 ...	BAR-exhaust manifold	1	1	
1-14516-1	BOLT	2	2	
9-15114 ...	WASHER-lock	2	2	
14330-12201 ...	PLATE-heat shield, carburetor	1	1	14330-10400
1-11514-1	BOLT	4	4	1-11410
9-15114 ...	WASHER-lock	4	4	9-15114
14050-12200 ...	COCK-three way	1	1	
7-12152 ...	CONNECTOR	1	1	
14052-12200 ...	NUT — manifold to water pump	1	1	

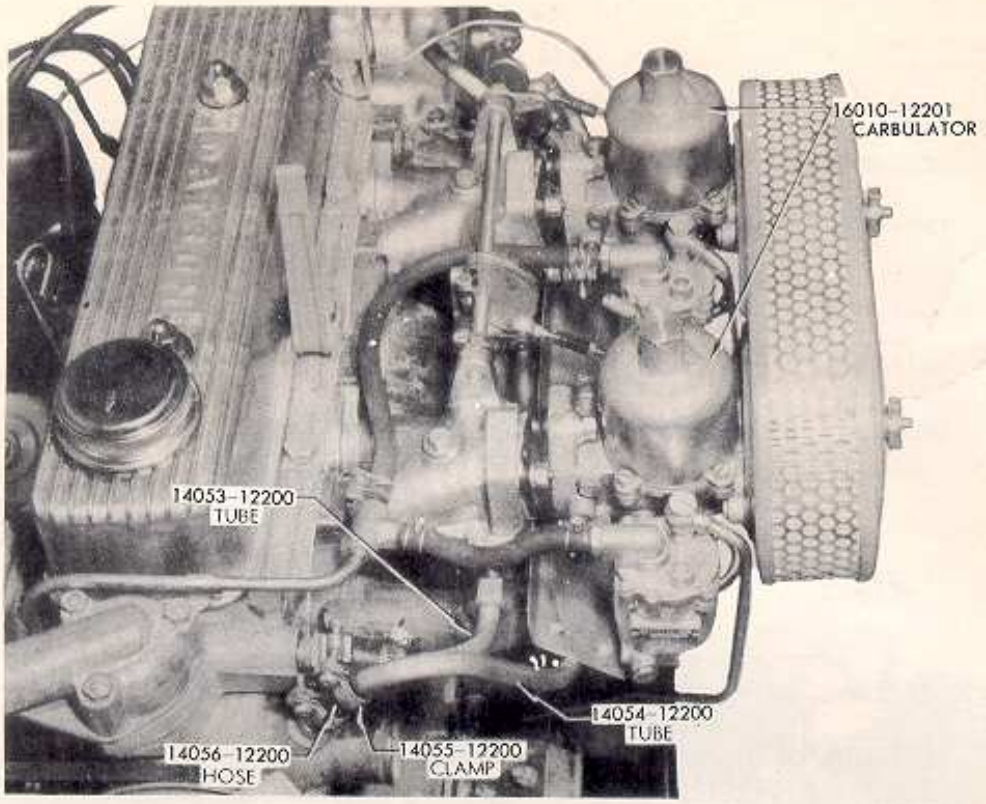

14053-12200 ...	TUBE-manifold to cylinder head	1	1		
14054-12200 ...	TUBE-manifold to water pump	1	1		
14055-12200 ...	CLAMP-water tube	2	2		
14056-12200 ...	HOSE-water	3	3		
7-21119 ...	CLAMP-hose	6	6		
3-11008-1	SCREW	4	4		
9-11110-1	NUT to fix shield plate	4	4		
9-15110 ...	WASHER-lock	4	4		
16174-12202 ...	INSULATOR-carbulator	2	2	16174-10401	
9-15116 ...	WASHER-lock	4	4	(9-15116)	
9-11146 ...	NUT	4	4	(9-11146)	
16031-10401 ...	ASS'Y-OVER FLOW, carbulator	2	2		
14012-10400 ...	BRACKET-drain tube	2	2		
18455-30000 ...	RUBBER-ferrule	2	2		
18127-12200 ...	SUPPORT-accelerator wire	1			

OIL PUMP

15010-12200 ...	ASS'Y-PUMP, oil, with oil strainer	1	1	15010-32200
15015-12200 ...	COVER-oil pump	1	1	15015-32200
15040-61000 ...	ASS'Y-SPINDLE, driving, oil pump	1	1	15041-32200

CARBULATOR

16010-12201 ...	ASS'Y-CARBULATOR	1	—	16010-10402
16010-12301 ...	ASS'Y-CARBULATOR	—	1	16010-10402

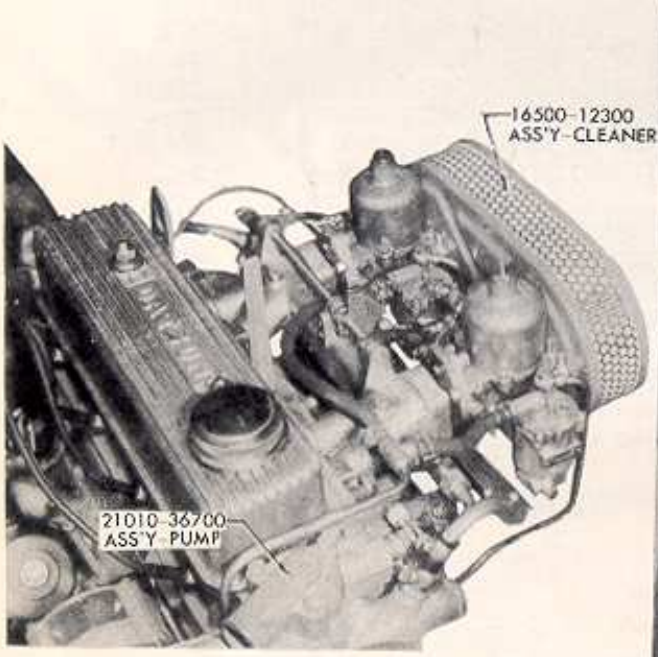

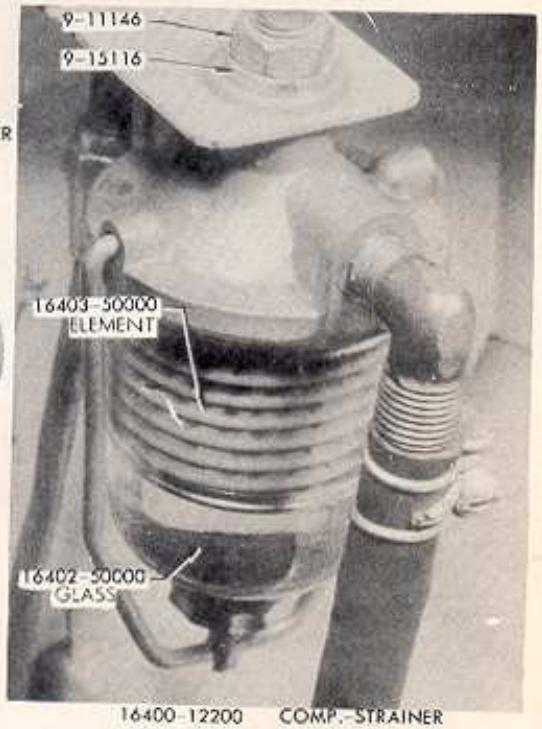

16400-12200 COMP.-STRAINER

AIR CLEANER

16500-12200 ...	ASS'Y-CLEANER, air	1	—	16500-10400
16500-12300 ...	ASS'Y-CLEANER, air	u-1	1	16500-10500
16526-12200 ...	ASS'Y-COVER-upper (caution plate is written in Japanese)	1	—	16526-10400
16526-12300 ...	ASS'Y-COVER-upper (caution plate is written in English)	u-1	1	16526-10400
16547-12200 ...	PACKING	1	1	16536-10400
16546-12200 ...	ASS'Y-ELEMENT	1	1	16546-10400

16528-12200 ...	ASS'Y-COVER, lower	1	1	16528-10400 16528-10500
16547-12200 ...	PACKING	1	1	16547-10400
16551-08000 ...	NUT-wing	2	2	
16568-08000 ...	PACKING	2	2	
16523-12200 ...	GASKET-carburetor to air cleaner	1	1	16523-10400

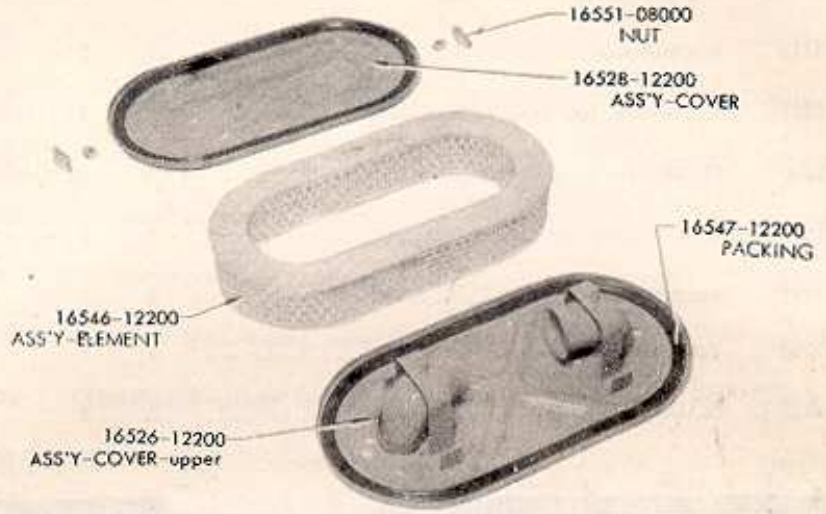

FUEL STRAINER

16400-12200 ...	COMP.-STRAINER, fuel	1	1	
16402-50000 ...	GLASS-fuel strainer	1	1	
16403-50000 ...	ASS'Y-ELEMENT, filter	1	1	
16406-50000 ...	PACKING-element	1	1	
16407-87260 ...	PACKING-fuel strainer	1	1	
16408-85060 ...	WASHER-fuel strainer	1	1	
16409-85060 ...	BOLT-fuel strainer	1	1	
16410-85060 ...	NUT-fuel strainer	1	1	
16411-87261 ...	WIRE-fuel strainer	1	1	
15233-85160 ...	ELBOW-inlet, oil filter	1	1	
17103-12200 ...	CONNECTOR (fuel pump to strainer)	1	1	
9-15116-1	WASHER-lock } to fix fuel strainer	1	1	
9-11146-1	NUT }	1	1	

FUEL PUMP

17010-12200 ...	ASS'Y-PUMP, fuel	1	1	17010-10400
17082-61000 ...	CAP-pump, fuel	1	1	
17099-30000 ...	WASHER-joint, fuel pump	2	2	(17099-30000)
16420-50000 ...	SPACER-fuel pump to cylinder block.....	1	1	16420-30100
9-11145 ...	NUT	2	2	(9-11145)
9-15115 ...	WASHER-lock	2	2	(9-15115)
17522-12201 ...	ASS'Y-TUBE, fuel pump to carburetor	1	1	17522-10400
17107-12200 ...	CLAMP-tube, pump to carburetor	1	1	17106-32200
1-11512 ...	BOLT.....	2	2	
9-15115 ...	WASHER-lock	2	2	
17518-12200 ...	TUBE-flexible, strainer to fuel pump	1	1	
16439-04101 ...	CLAMP-tube, flexible	2	2	

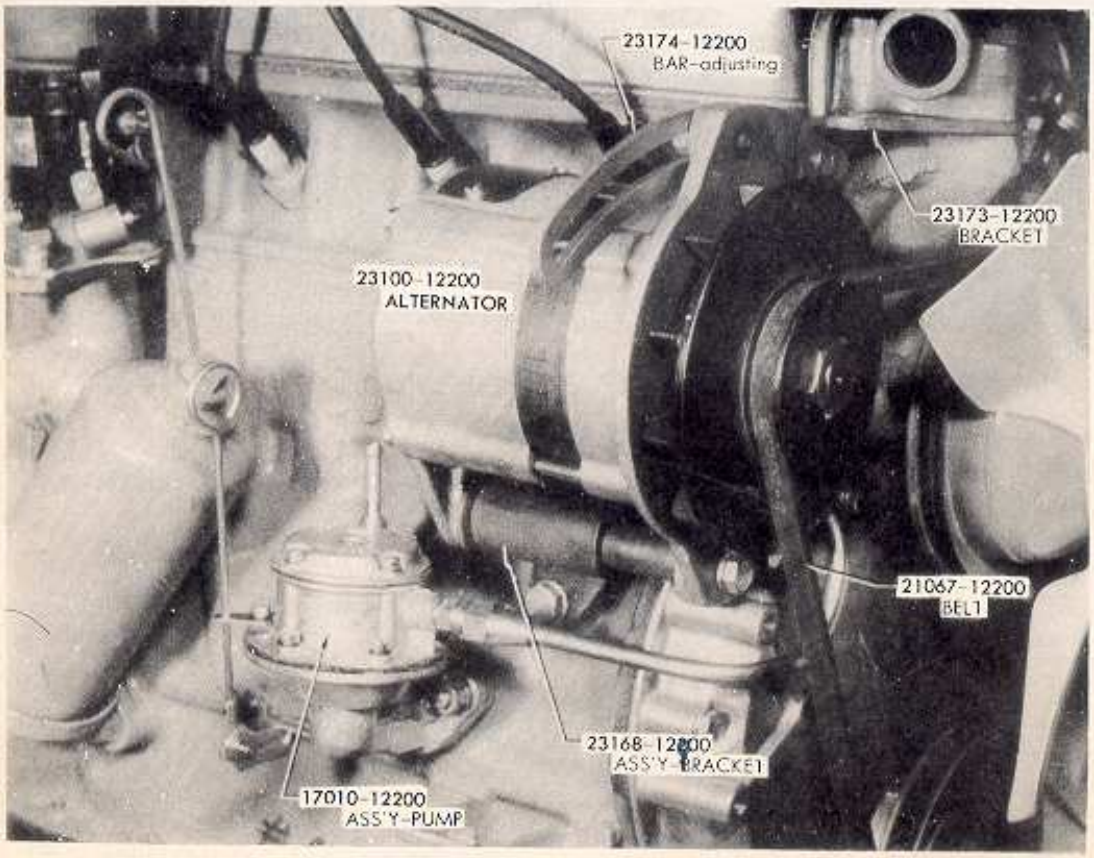

FUEL PIPING

17503-10451 ...	ASS'Y-TUBE, fuel tank to connector	1	1	17503-10400
17502-12250 ...	ASS'Y-TUBE, connector to strainer	1	1	17502-10401

WATER PUMP & FAN

21010-36700 ...	ASS'Y-PUMP, water	1	1	21010-~~32200~~ 38700
21013-61000 ...	COVER-water pump	1	1	21013-32200
21014-61000 ...	GASKET-water pump cover, body side	1	1	21014-32200
21074-61000 ...	GASKET-water pump cover, block side	1	1	21074-32200
21022-61000 ...	VANE-water pump	1	1	21022-32202
21026-61000 ...	SEAL-water pump	1	1	21026-04000
21027-61000 ...	ASS'Y-SEAT, floating, water pump	1	1	21027-04000
14057-12200 ...	CONNECTOR-cylinder head to water pump	1	1	
21067-12200 ...	BELT-fan	1	1	21067-30000
21051-32200 ...	PULLEY-fan & water pump	1	1	(21051-32200)
21060-32200 ...	ASS'Y-BLADE, fan	1	1	(21060-32200)

DISTRIBUTOR & ALTERNATOR MOUNTING

23168-12200 ...	ASS'Y-BRACKET, mounting, alternator		1	1	23168-32200
1-14530-1	BOLT	to fix alternator to bracket	2	2	1-34525-1
9-15115-1	WASHER-lock		2	2	9-15215-1
23172-12200 ...	SPACER		1	1	
1-11628 ...	BOLT	to fix bracket to cylinder block	1	1	
1-11616-1	BOLT		2	2	
9-15116-1	WASHER-lock		3	3	
23174-12200 ...	BAR-adjusting, alternator		1	1	23174-32200
1-14520-1	BOLT	to fix bar to cylinder block	1	1	
9-11145-1	NUT		1	1	
23173-12200 ...	BRACKET-adjusting bar		1	1	

ALTERNATOR

(GENERATOR)

23100-12200 ...	ALTERNATOR (12V-300W)	1	1	23100-32200

STARTER MOTOR

23300-36900 ...	ASS'Y-MOTOR, starter	1	1	23300-30100
23310-36900 ...	ASS'Y-ARMATURE	1	1	23310-30100
23321-09900 ...	WASHER-thrust	3	3	23339-30100 23382-30100
23339-09500 ...	WASHER-thrust	1	1	23320-30100
23312-61000 ...	ASS'Y-PINION & CLUTCH	1	1	23312-30101
23442-09600 ...	SPRING-pinion sleeve (No. 1)	1	1	23315-30100
23443-09600 ...	SPRING-Pinion sleeve (No. 2)	1	1	23315-30100
23374-09500 ...	SLEEVE-pinion	2	2	23374-30100
23372-09600 ...	CLIP-sleeve pinion	2	2	23372-30100
23444-09600 ...	STOPPER-spring sleeve	1	1	23314-30100
23351-09600 ...	WASHER-pinion	1	1	23370-30100
23369-43600 ...	STOPPER-pinion	1	1	
23373-43600 ...	CLIP-stopper, pinion	1	1	

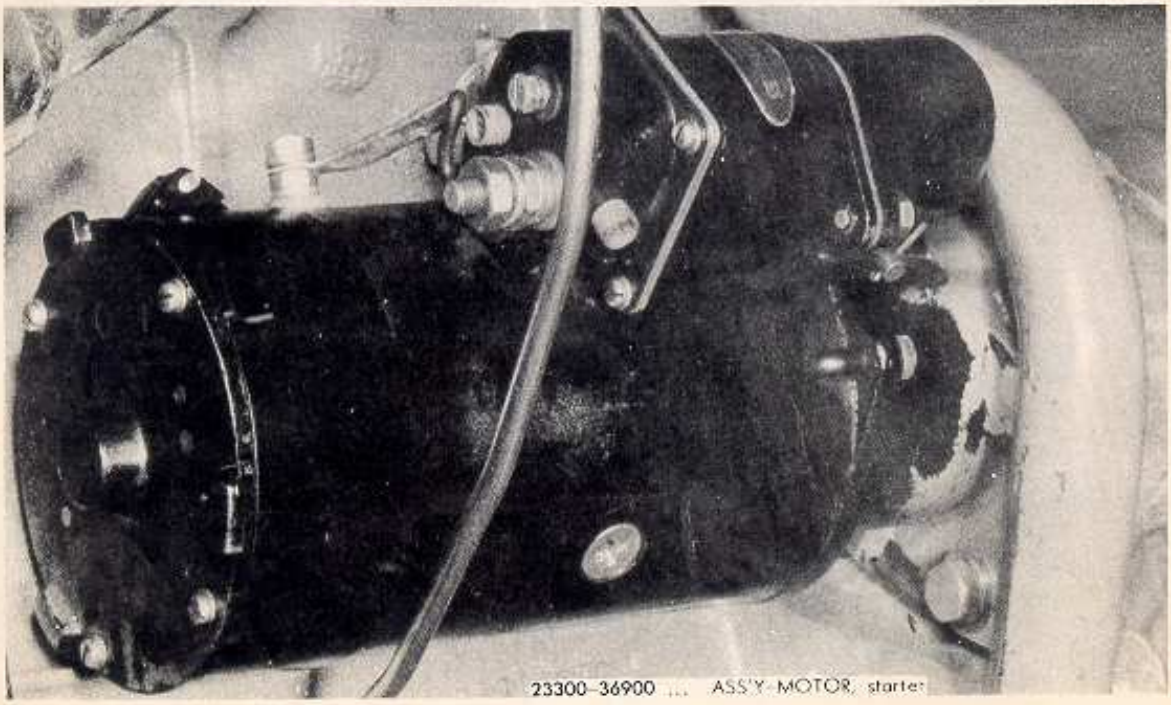

23300-36900 ... ASS'Y-MOTOR, starter

23370-09600 ...	WASHER-stopper, pinion	1	1	
23383-09500 ...	ASS'Y-BEARING, center	1	1	
23441-09500 ...	BEARING-metal, center	1	1	
23450-09500 ...	BRAKE	1	1	
23453-09500 ...	SPRING-brake	1	1	
23446-36900 ...	COVER-dust	1	1	
23322-09500 ...	ASS'Y-LEVER, pinion shaft	1	1	
23323-09500 ...	PIN-lever, shift	1	1	
23391-43300 ...	PIN-cotter	1	1	
23337-09500 ...	ASS'Y-COVER, rear	1	1	23337-30100
23338-09900 ...	BEARING-metal	1	1	
23333-09900 ...	SPRING-brush	4	4	23333-30100
23379-09900 ...	BRUSH (-)	2	2	23379-30100
23380-09902 ...	BRUSH (+)	1	1	23380-30100
23547-25660 ...	SCREW (3φ)	2	2	
22103-50000 ...	SCREW (4φ)	4	4	
23306-36900 ...	ASS'Y-COIL, field	1	1	23306-30100
23305-09500 ...	SCREW-set, pole core	4	4	
23384-09601 ...	ASS'Y-TERMINAL	1	1	23384-30100
23342-09901 ...	ASS'Y-COVER, brush	1	1	
23352-09600 ...	BOLT-joint	2	2	23340-30100
23393-09900 ...	NUT	2	2	
23343-36900 ...	ASS'Y-SWITCH, magnetic	1	1	
23445-36900 ...	COVER-dust	1	1	23342-30100
22201-09600 ...	BOLT (5φ)	2	2	
23318-36900 ...	ASS'Y-CASE, gear	1	1	23318-30100
23319-09600 ...	BEARING-metal	1	1	

WIRING

24012-12200 ...	COMPLETE-CABLE, engine room harness	1	1	24012-10401
24020-12200 ...	ASS'Y-CABLE, generator	1	1	24020-10400
24013-12200 ...	COMPLETE-CABLE, instrument harness	1	—	24013-10401
24013-12300 ...	COMPLETE-CABLE, instrument harness	—	1	24013-10500

ELECTRIC UNIT

25150-12200 ...	COMPLETE-SWITCH, ignition & starter, with key	1	1	25150-09900
25160-10400 ...	COMPLETE-SWITCH, lighting, without fog lamp's	1	1	
25160-10401 ...	COMPLETE-SWITCH, lighting, with fog lamp's	1	1	125160-10401

METER

26460-10400 ...	ASS'Y-LAMP, warning, turn signal lambert	1	1	26461-08600
26451-08600 ...	ASS'Y-LAMP, warning, main beam lred	1	1	126451-08600

W/S WIPER

26340-12200 ...	ASS'Y-WIPER DRIVE, W/S	1	1	26340-10400
26345-10400 ...	ASS'Y-FLAME, wiper drive	1	1	126345-10400
26347-10400 ...	CASHING-flexible wire	1	1	126347-10400
26348-10400 ...	CASHING-outer, wind screen	1	1	26348-30001
26355-12200 ...	ASS'Y-MOTOR, W/S wiper drive	1	1	26355-10400
26371-10400 ...	ASS'Y-BOX, wheel, W/S wiper	2	2	126371-10400
27400-12200 ...	KIT-W/S WASHER	1	—	27400-10400
27400-12201 ...	KIT-W/S WASHER	o-1	—	27400-10401
27400-12300 ...	KIT-W/S WASHER	—	1	27400-10500



IGNITION COIL & HIGH TENSION CABLE

22433-09400 ...	COIL-ignition (HITACHI)	}	1		
22433-09500 ...	COIL-ignition (HANSHIN)	}			22433-31304
22433-31300 ...	COIL-ignition		u-1	1	
3-14414-1	SCREW	}	2	2	(3-14414-1)
9-15114-1	WASHER-lock	} to fix coil to dash.....	2	2	(9-15114-1)
9-15414-1	WASHER-plain	}	2	2	(9-15414-1)
22401-58000 ...	PLUG-spark (N·G·K)		u-4	4	(22401-58000)
22401-32201 ...	PLUG-spark (HITACHI)		4	—	22401-32200
23500-12200 ...	REGULATOR-voltage		1	1	23500-42200
3-14416-1	SCREW	} to fix regulator to hood ledge	2	2	3-14420-1
9-15114-1	WASHER-lock	}	2	2	(9-15114-1)
22431-10560 ...	RING-high tension cable		1	1	

STEERING WHEEL

48400-10401 ...	ASS'Y-WHEEL, steering		1	1	48400-10400

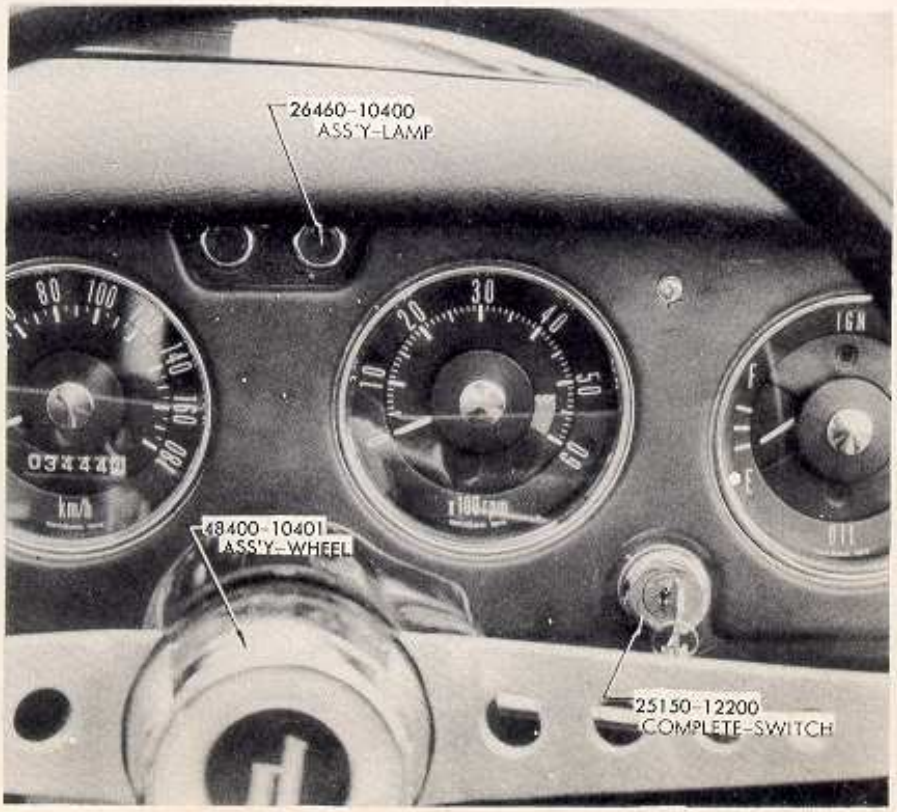

CAR HEATER

27010-12200 ...	KIT-HEATER, car	1	—	27010-10400
27010-12300 ...	KIT-HEATER, car	—	1	27010-10400

RADIO

27310-12200 ...	SET-RADIO	1	—	27310-10400
27310-12300 ...	SET-RADIO	—	1	27310-10500

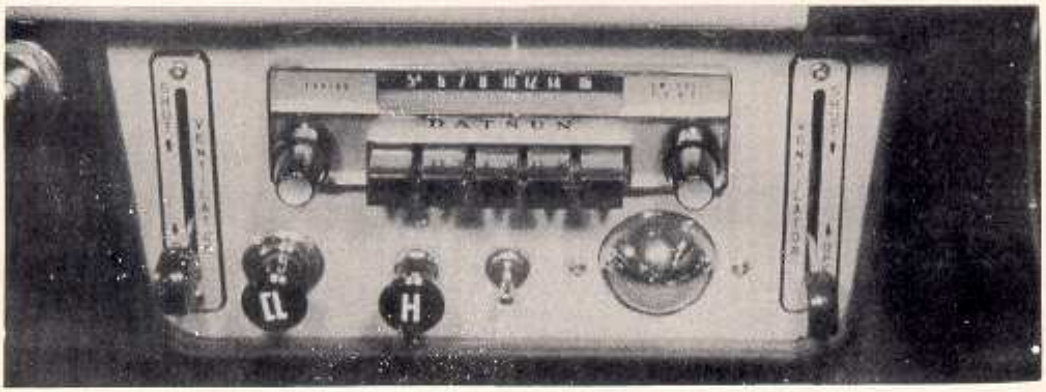

BRAKE & CLUTCH PEDAL

46520-10501 ...	ASS'Y-PEDAL, brake	1	—	46520-10400
46520-12300 ...	ASS'Y-PEDAL, brake	—	1	46520-10501
46425-30000 ...	BUSH-pedal fulcrum	2	2	46425-30000

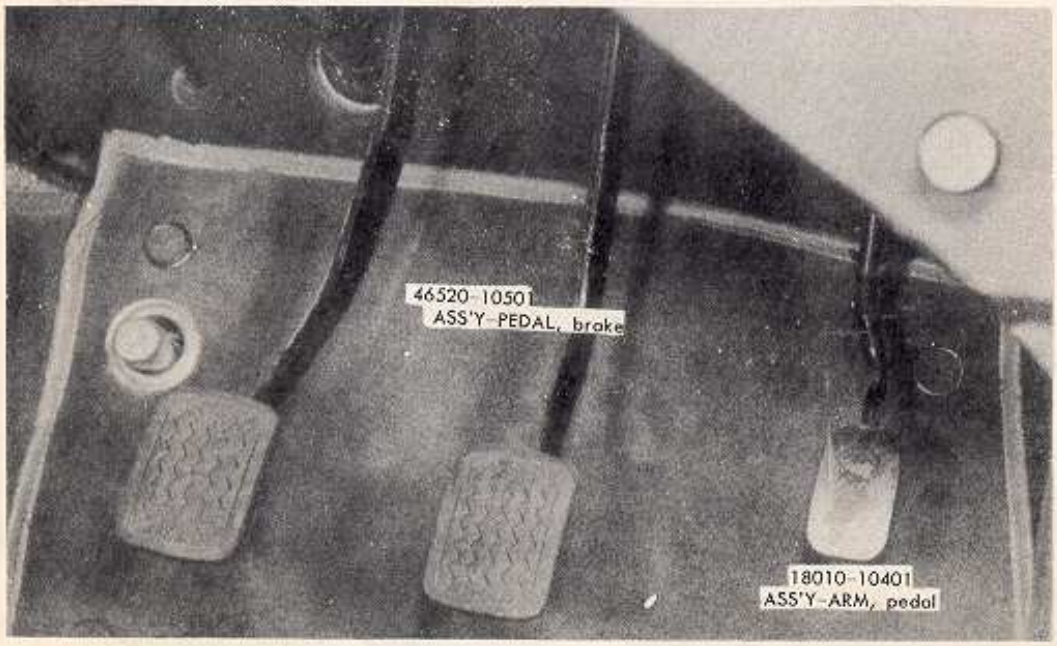

ACCELERATOR

18010-10401 ...	ASS'Y-ARM, pedal	1	—	(18010-10401)
18010-10500 ...	ASS'Y-ARM, pedal	—	1	(18010-10500)
18138-10401 ...	SPRING-return, accelerator pedal	1	—	(18138-10401)
18138-10500 ...	SPRING-return, accelerator pedal	—	1	18138-10401
18100-10400 ...	ASS'Y-WIRE, accelerator	1	—	(18100-10400)
18100-12300 ...	ASS'Y-WIRE, accelerator	—	1	18100-10500

CHOKE CONTROL

18410-12200 ...	COMPLETE-WIRE, choke control, with knob.....	1	—	18410-10400
18410-12300 ...	COMPLETE-WIRE, choke control, with knob.....	—	1	18410-10500

BRAKE MASTER CYLINDER

46010-12200 ...	ASS'Y-CYLINDER, brake master.....	1	1	46010-07400

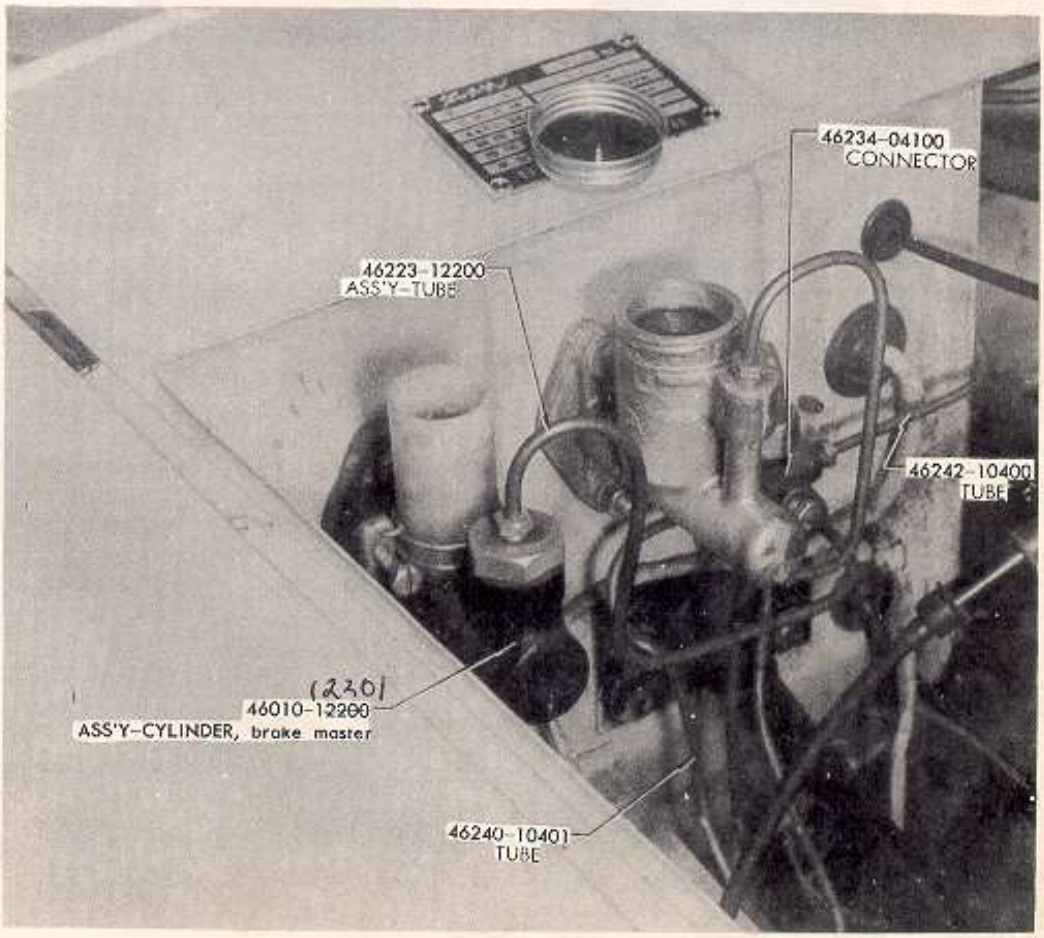

BRAKE PIPING

46223-12200 ...	ASS'Y-TUBE, hydraulic brake master cylinder to 5 way connector	1	—	46223-10401
46223-12300 ...	ASS'Y-TUBE, hydraulic brake master cylinder to 5 way connector	—	1	46223-10500
46234-04100 ...	CONNECTOR-brake tube, 5 way.....	1	1	(46234-04100)
1-14430-1	BOLT.....	1	1	1-14420-1
9-15114-1	WASHER-lock	1	1	(9-15114-1)
46240-10401 ...	ASS'Y-TUBE, 5way connector to front brake hose (R.H)	1	1	46240-10400
46242-10400 ...	ASS'Y-TUBE, 5way connector to front brake hose (L.H)	1	1	(46242-10400)
46229-10401 ...	ASS'Y-TUBE, 5way connector to center connector.....	1	1	46229-10400
46228-10401 ...	ASS'Y-TUBE, center connector to rear brake hose.....	1	1	46228-10400
46361-30001 ...	CONNECTOR-brake tube 3 way	1	1	46316-30001

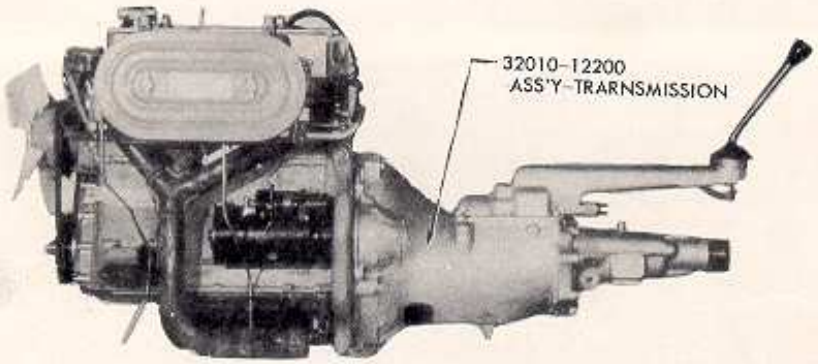

TRANSMISSION

32010-12200 ...	ASS'Y-TRARNSMISSION, with clutch lever	1	1	32010-10450
32101-12200 ...	CASE-transmission	1	1	32101-10400
32114-00100 ...	STUD (to fix front cover)	7	7	2-84520
32291-09500 ...	WASHER-lock	1	1	32291-00100
32213-12200 ...	GEAR-counter shaft.....	1	1	32213-27160
32201-12200 ...	GEAR-main drive.....	1	1	32201-10400
2246-02700 ...	WASHER-thrust, main shaft, rear	1	1	32246-26760
32150-01300 ...	ASS'Y-STICK, oil level dip	1	1	32150-03200

HAND BRAKE CONTROL

36010–10401 ...	ASS'Y–CONTROL, hand brake	1	1	36010–10400
36310–10401 ...	ASS'Y–LEVER, hand brake	1	1	36310–10400

CLUTCH OPERATING CYLINDER

30650–10401 ...	ASS'Y–TUBE, clutch master cylinder to flexible hose ...	1	—	
30650–10500 ...	ASS'Y–TUBE, clutch master cylinder	—	1	[30650–10500]

ROAD WHEEL

40300–10500 ...	ASS'Y–ROAD WHEEL	5	—	40300–10400
40300–10500 ...	ASS'Y–ROAD WHEEL	u–5	5	[40300–10500]
40225–04100 ...	NUT–road wheel.....	16	16	[40225–04100]
40315–10400 ...	ASS'Y–COVER, road wheel.....	4	4	[40315–10400]

REAR BRAKE

44000–10600 ...	ASS'Y–BRAKE, rear (R.H)	1	1	(44000–10600)
44010–10600 ...	ASS'Y–BRAKE, rear (L.H)	1	1	[44000–10600]
44100–10600 ...	ASS'Y–CYLINDER, rear wheel	2	2	44100–10500

REAR SUSPENSION

55020–09400 ...	ASS'Y–SPRING, rear	2	—	55025–10400
55021–09400 ...	LEAF–rear spring (No. 1)	2	—	55021–10400
55022–09400 ...	LEAF–rear spring (No. 2)	2	—	55022–10400
55023–09400 ...	LEAF–rear spring (No. 3)	2	—	
55024–09400 ...	LEAF–rear spring (No. 4)	2	—	
55057–09400 ...	BOLT–center, rear spring	2	—	55057–10400
9–99204 ...	NUT (to fix center bolt).....	2	—	(9–99204)
55020–10500 ...	ASS'Y–SPRING, rear	u–2	2	[55020–10500]
55247–09400 ...	CLIP–rear spring	4	—	55247–10400
55247–10500 ...	CLIP–rear spring	u–4	4	[55247–10500]
55262–09400 ...	SEAT–rear spring (R.H)	1	1	55262–04102
55266–09400 ...	SEAT–rear spring (L.H)	1	1	55266–04102

FRONT BRAKE

41000–10502 ...	ASS'Y–BRAKE, front (R.H)	1	1	(41000–10502)
41010–10502 ...	ASS'Y–BRAKE, front (L.H)	1	1	(41010–10502)
41090–10601 ...	SPRING–return, front brake shoe	1	1	41090–10600
41100–10600 ...	ASS'Y–CYLINDER, front wheel, fore (R.H)	1	1	41100–10500
41102–10600 ...	ASS'Y–CYLINDER, front wheel, fore (L.H)	1	1	41102–10500
41101–10600 ...	ASS'Y–CYLINDER, front wheel, after (R.H)	1	1	41101–10500
41103–10600 ...	ASS'Y–CYLINDER, front wheel, after (L.H)	1	1	41103–10500
9–11144–1	NUT–special, wheel cylinder	4	4	41157–30000
9–15114–1	WASHER–lock	4	4	(9–15114–1)
1–24522–1	BOLT	4	4	1–14525–1
9–11245–1	NUT	4	4	9–11145–1
9–15115–1	WASHER–lock	4	4	(9–15115–1)
41140–10600 ...	ASS'Y–TUBE, bridge, front (R.H)	1	1	41140–10500
41141–10600 ...	ASS'Y–TUBE, bridge, front (L.H)	1	1	41141–10500
44081–32201 ...	PIN–anti rattle, rear brake shoe	4	4	(44081–32201)
44082–32200 ...	SEAT–spring, anti rattle shoe	4	4	(44082–32200)
44083–10600 ...	SPRING–anti rattle, brake shoe	4	4	44083–32200
44084–32201 ...	RETAINER spring, anti rattle shoe	4	4	(44084–32201)

STEERING GEAR

48010–10451 ...	ASS'Y–GEAR, steering	1	—	48010–10450
48010–10551 ...	ASS'Y–GEAR, steering	—	1	48010–10550
48011–10400 ...	COMPLETE–HOUSING	1	1	48011–04100
48127–30001 ...	BUSHING–idler shaft	2	2	(48127–30001)
48206–30800 ...	STUD–housing, front	2	2	(48206–30800)
48539–36700 ...	SEAL–oil, rocker shaft	1	1	48539–10600
11120–10460 ...	PLUG–drain	1	1	(11120–10460)
48201–04100 ...	COVER–rocker shaft	1	1	(48201–04100)

48204-10600 ...	GASKET-rocker shaft cover	1	1	48204-30800
1-24525 ...	BOLT }	2	2	(1-24525)
1-24535 ...	BOLT } to fix rocker shaft cover	2	2	(1-24535)
9-15115 ...	WASHER-lock }	4	4	(9-15115)
48064-04100 ...	ASS'Y-PLUG, filler	1	1	(48064-04100)
48135-30800 ...	SCREW-rocker shaft adjusting	1	1	(48135-30800)
9-11347 ...	NUT-lock	1	1	(9-11347)
48219-10600 ...	COVER-housing, front	1	1	48219-04100
48035-04100 ...	"O" RING-housing cover	1	1	(48035-04100)
48210-61000 ...	SHIM-worm bearing 0.76t	1	1	48210-04100
48211-61000 ...	SHIM-worm bearing 0.25t	1	1	48211-04100
48212-61000 ...	SHIM-worm bearing 0.13t	1	1	48212-04100
48213-61000 ...	SHIM-worm bearing 0.05t	1	1	48213-04100
9-11245 ...	NUT }	1	1	(9-11245)
9-15115 ...	WASHER-lock } to fix front cover	3	3	(9-15115)
1-24518 ...	BOLT }	2	2	(1-24518)
48203-10400 ...	COVER-housing, rear	1	1	(48203-04100)
48029-04100 ...	SEAL-oil, worm shaft	1	1	(48029-04100)
48035-04100 ...	"O" RING-housing cover	1	1	(48035-04100)
9-11245 ...	NUT }	1	1	(9-11245)
9-15115 ...	WASHER-lock } to fix rear cover	3	3	(9-15115)
1-24518 ...	BOLT }	2	2	(1-24518)
48050-10401 ...	COMPLETE-JACKET, steering column	1	—	(48050-10401)
48050-10501 ...	COMPLETE-JACKET, steering column	—	1	(48050-10501)
48053-10500 ...	WASHER-special lock	4	4	(48053-10500)
9-15514 ...	WASHER-plain	4	4	
48054-10400 ...	ASS'Y-BUSHING, column	1	1	(48054-10400)
3-69416 ...	BOLT	4	4	3-69414

48100–10400 ...	ASS'Y–SHAFT, rocker	1	1	48100–04100
48501–10400 ...	ARM–steering gear	1	1	48501–04100
48521–04100 ...	SEAL–dust, rocker shaft	1	1	[48521–04100]
48504–04100 ...	NUT–gear arm	1	1	(48504–04100)
9–21435 ...	PIN–cotter	1	1	9–21345
9–16216 ...	WASHER–lock }	1	1	[9–16216]
1–24638 ...	BOLT } to fix steering gear ass'y	3	3	(1–24638)
9–12646 ...	NUT }	2	2	[9–12646]
9–15116 ...	WASHER–lock }	2	2	(9–15116)

HOOD LEDGE

64100–12230 ...	ASS'Y–HOOD LEDGE R.H.	1	—	64100–10430
64100–12330 ...	ASS'Y–HOOD LEDGE R.H.	—	1	64100–10530
64101–12230 ...	ASS'Y–HOOD LEDGE L.H.	1	1	64101–10430

PRIVATE LOCK & KEY

80010–10451 ...	SET–CYLINDER LOCK & KEY	1	1	80010–10450

SET INCLUDES FOLLOWING PARTS

ASS'Y–KEY with holder

ASS'Y–LOCK, glove box lid

ASS'Y–HANDLE, trunk lid

COMPLETE–SWITCH, ignition & starter

ASS'Y–CYLINDER, door lock R.H.

ASS'Y–CYLINDER, door lock L.H.

ASS'Y–CAP, filler

CLIP–retaining, cylinder door lock

PACKING–trunk lid handle